USER'S MANUAL

IMMERGAS

Instruction and recommendation booklet

IE

MAGIS PRO ERP

Mono-phase hydronic module to pair with an outdoor condensing unit

1.039356ENG

Dear Customer,

Our compliments for having chosen a top-quality Immergas product, able to assure well-being and safety for a long period of time. As an Immergas customer you can also count on a qualified after-sales service, prepared and updated to guarantee constant efficiency of your boiler. Read the following pages carefully: you will be able to draw useful suggestions regarding the correct use of the appliance, the respect of which, will confirm your satisfaction for the Immergas product.

Contact our area authorised after-sales centre as soon as possible to request commissioning. Our technician will verify the correct functioning conditions; he will perform the necessary calibrations and will demonstrate the correct use of the generator.

For assistance and scheduled maintenance contact Authorised Immergas After-Sales centres: they have original spare parts and are specifically trained directly by the manufacturer.

General recommendations

All Immergas products are protected with suitable transport packaging.

The material must be stored in dry environments protected from bad weather.

The instruction book is an integral and essential part of the product and must also be given to the new user in the case of transfer or succession of ownership.

It must be stored with care and consulted carefully, as all of the warnings provide important safety indications for installation, use and maintenance stages.

This instructions manual provides technical information for installing Immergas products. As for the other issues related to the installation of products (e.g. safety at the workplace, environmental protection, accident prevention), it is necessary to comply with the provisions of the standards in force and the principles of good practice.

In compliance with the legislation in force, the systems must be designed by qualified professionals, within the dimensional limits established by the Law. Installation and maintenance must be performed in compliance with the regulations in force, according to the manufacturer's instructions and by professionally qualified staff, intending staff with specific technical skills in the plant sector, as envisioned by the Law.

Improper installation or assembly of the Immergas appliance and/or components, accessories, kit and devices can cause unexpected problems for people, animals and objects. Read the instructions provided with the product carefully to ensure proper installation.

Maintenance must be carried out by skilled technical staff. The Immergas Authorised After-sales Service represents a guarantee of qualifications and professionalism.

The appliance must only be destined for the use for which it has been expressly declared. Any other use will be considered improper and therefore potentially dangerous.

If errors occur during installation, operation and maintenance, due to non-compliance with technical laws in force, standards or instructions contained in this book (or however supplied by the manufacturer), the manufacturer is excluded from any contractual and extra-contractual liability for any damages and the appliance warranty is invalidated.

For further information regarding legislative and statutory provisions relative to the installation of gas heat generators, consult the Immergas site at the following web address: www.immergas.com

CE DECLARATION OF CONFORMITY
(according to ISO/IEC 17050-1)

The company **IMMERGAS S.p.A.**, with registered office in via Cisa Ligure 95 42041 Brescello (RE), whose design, manufacturing and after-sales assistance processes comply with the requirements of standard **UNI EN ISO 9001:2008**,

DECLARES that:

MAGIS PRO ERP hydronic units comply with the following European Directives and European Commission Delegated Regulations:
"Eco-design" Directive 2009/125/EC, "Energy labelling" Directive 2010/30/EC, EU Regulation 811/2013, EU Regulation 813/2013, "Electromagnetic Compatibility" Directive 2004/108/EC, "Efficiency" Directive 92/42/EC and "Low-Voltage" Directive 2006/95/EC.

Mauro Guareschi

Research & Development Director

Signature:

INDEX

1 HYDRONIC MODULE INSTALLATION.

1.1 INSTALLATION RECOMMENDATIONS.

The Magis Pro ErP hydronic module was designed solely for wall mounted installation for heating and air conditioning and to produce domestic hot water for domestic use and similar purposes.
In order to operate properly, it must be paired with an Audax Pro condensing unit; as such, all the provisions regarding the safety and use of both appliances must be respected.

The place of installation of the appliance and relative Immergas accessories must have suitable features (technical and structural), such as to allow for (always in safe, efficient and comfortable conditions):
- installation (according to the provisions of the technical legislation and technical regulations);
- maintenance operations (including scheduled, periodic, routine and special maintenance);
- removal (to outdoors in the place for loading and transporting the appliances and components) as well as their eventual replacement with appliances and/or equivalent components.

The wall surface must be smooth, without any protrusions or recesses enabling access to the rear part. They are not designed to be installed on plinths or floors (Fig. 1-1).

Only professionally enabled companies are authorised to install Immergas appliances.
Installation must be carried out according to the provisions of the laws in force and in compliance with local technical regulations and the required technical procedures.

Before installing the appliance, ensure that it is delivered in perfect condition; if in doubt, contact the supplier immediately. Packing materials (staples, nails, plastic bags, polystyrene foam, etc.) constitute a hazard and must be kept out of the reach of children.

Should the appliance be contained inside or between pieces of furniture, there must be enough space for routine maintenance; therefore, it is recommendable to leave at least 3 cm between the unit casing and the vertical walls of the furniture. At least 25 cm of free space must be left above, in order to be able to carry out maintenance and, if necessary, install an additional resistance (optional). Leave space under the hydronic module to allow the hydraulic connections to be serviced.

Keep all flammable objects away from the appliance (paper, rags, plastic, polystyrene, etc.).
Do not put household appliances under the hydronic module as they could be damaged if the safety valve trips or if the hydraulic fittings leak. Otherwise, the manufacturer cannot be held liable for any damage to the household appliances. For the same reasons, it is also recommendable not to put furnishings, furniture, etc. under the hydronic module.

In the event of malfunctions, faults or incorrect operation, turn the appliance off immediately and contact an authorised company (e.g. the Immergas Technical Assistance centre, which has specifically trained staff and original spare parts). Do not attempt to modify or repair the appliance alone.
Failure to comply with the above implies personal responsibility and invalidates the warranty.

- Installation regulations:
  - this hydronic module can be installed outdoors in a partially protected area. By partially protected area, we mean one in which the unit is not directly exposed to the elements (rain, snow, hail, etc.).
  - Installation is prohibited on the vertical projection of cooking hobs.
  - Installation is also prohibited in places/environments that constitute common parts of office condominiums such as stairs, cellars, entrance halls, attics, lofts, escape routes, etc. if they are not located inside technical compartments under the responsibility of each individual building and only accessible to the user (for the features of the technical compartments, see the technical standards in force).
  - Using specific kits, the hydronic module can be paired with other Immergas products and installed inside an outdoor wall using the specific Solar Container recessed frame or mounted on an indoor wall in the Domus Container.

    Attention: Installing the wall recessed frame kit must guarantee the hydronic module stable, efficient support. The recessed frame kit ensures appropriate support only if installed correctly (according to the rules of good practice), following the instructions on its instructions leaflet. The recessed frame for the hydronic module is not a load-bearing structure and cannot replace the removed wall. Therefore, correct positioning inside the wall must be checked. For safety reasons to prevent leaks, the compartment that will house the hydronic module in the masonry wall must be plastered.

Attention: installing the hydronic module mounted on the wall must ensure the generator itself stable, efficient support.
The dowels (standard supplied with the unit) must only be used to secure the unit to the wall; they can only ensure sufficient support if inserted properly (according to the rules of good practice) on walls built with solid or semi-hollow bricks. In the case of walls made from hollow brick or block, partitions with limited static properties, or in any case walls other than those indicated, a static test must be carried out to ensure adequate support.

These hydronic units are used to heat water to below boiling temperature at atmospheric pressure. They must be connected to a central heating system and domestic hot water circuit suited to their performance and capacity.

Attention: The storage tank unit must also be installed in an environment in which the temperature cannot fall below 0°C.

"Anti-Legionella" treatment of the Immergas storage tank (function enabled when there is an additional electrical resistance for domestic hot water). During this phase, the temperature of the water inside the tank exceeds 60°C with the subsequent risk of burns. Keep this domestic water treatment under control (and inform the users) to prevent unforeseeable damage to people, animals, things. If required install a thermostatic valve on the domestic hot water outlet to prevent scalding.

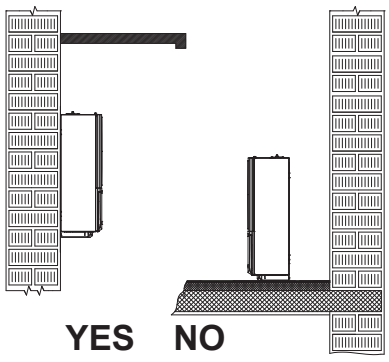

1-1

1.2 MAIN DIMENSIONS.

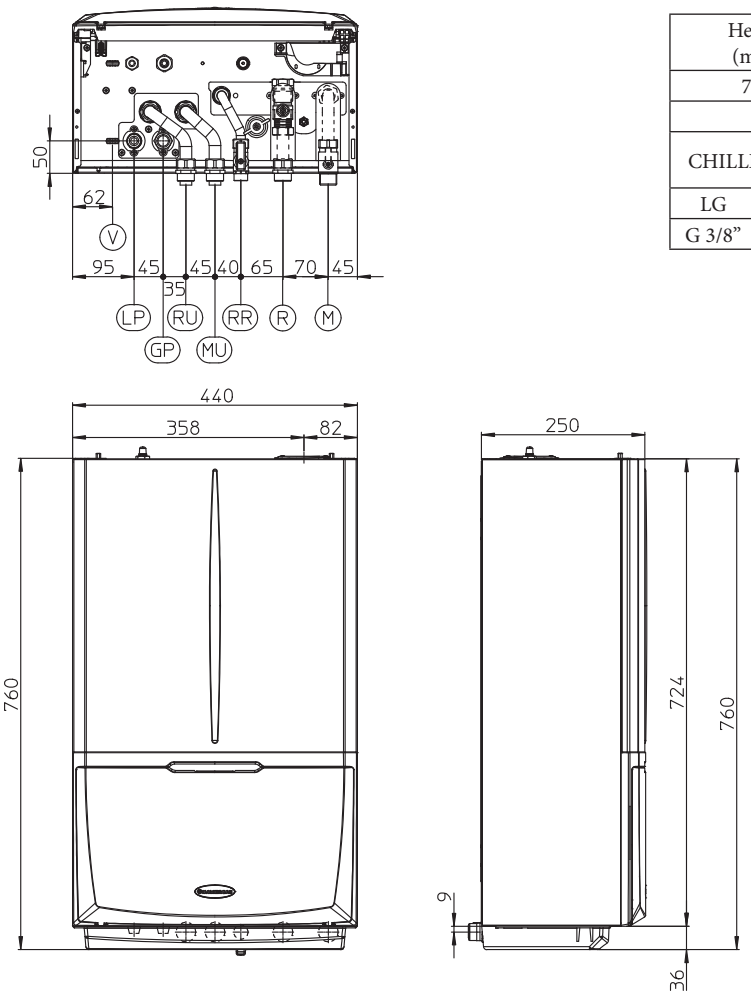

Height (mm)		Width (mm)	Depth (mm)	
760		440	250	
CONNECTIONS				
CHILLER LINE		DOMESTIC HOT WATER	SYSTEM	
LG	GP	RR	R - M	RU - MU
G 3/8”	G 5/8”	1/2”	3/4”	3/4”

Key:
- *V - Electrical connection*
- *RR - System filling*
- *RU - Storage tank unit return*
- *MU - Storage tank unit flow*
- *R - System return*
- *M - System flow*
- *LP - Chiller line - liquid phase*
- *GP - Chiller line - gaseous phase*

1-2

1.3 ANTIFREEZE PROTECTION.

Minimum temperature -5°C. The hydronic unit comes standard with an anti-freeze function that activates the condensing unit when the temperature of the water inside of it falls below 4°C.
In these conditions, the hydronic unit is protected against freezing up to an ambient temperature of -5 .

Minimum temperature -15°C. In the event the hydronic unit is installed in a place where the temperature falls below -5°C, it is possible for the appliance to freeze.
To prevent the risk of freezing follow the instructions below:

- protect the central heating circuit from freezing by inserting a good-quality antifreeze liquid into this circuit, which is specially suited for central heating systems and which is manufacturer guaranteed not to cause damage to the heat exchanger or other components of the hydronic module. The antifreeze liquid must not be harmful to one's health. The instructions of the manufacturer of this liquid must be followed scrupulously regarding the percentage necessary with respect to the minimum temperature at which the system must be kept. An aqueous solution must be made with potential pollution class of water 2 (EN 1717:2002).

  The materials used for the hydraulic circuits of Immergas hydronic units resist ethylene and propylene glycol based antifreeze liquids (if the mixtures are prepared perfectly).

  For life and possible disposal, follow the supplier's instructions.
- Protect the domestic hot water circuit against freezing by using an accessory that is supplied on request (antifreeze kit) comprising two electric heating elements, the relevant cables and a control thermostat (carefully read the installation instructions contained in the accessory kit pack).

In these conditions, the hydronic unit is protected against freezing up to a temperature of -15°C.

Hydronic unit anti-freeze protection (both -5°C and -15°C) is only ensured if:

- *The hydronic unit and the condensing unit are properly connected to each other and to the electrical supply voltage circuits;*
- *The units are continuously powered;*
- *The units are not in "off" mode.*
- *The units are not in anomaly (parag. 2.5);*
- *The unit and/or kit essential components are not faulty.*

The warranty does not cover damage due to interruption of the electrical power supply and failure to comply with that stated on the previous page.

N.B.: if the hydronic unit is installed in places where the temperature drops below 0°C, the domestic hot water connection pipes must be insulated.

1.4 HYDRONIC MODULE CONNECTION UNIT.

- The hydraulic connection unit is standard supplied with Magis Pro ErP. Make the hydraulic connection as shown below, making sure to protect the system flow and return pipes with their supplied insulating sheaths.
- The *R410A* circuit wall connection unit is supplied as an extra kit. Connect the circuit, following the instructions provided in the condensing unit instructions booklet.

1.5 HYDRAULIC CONNECTION.

Attention: in order not to void the product warranty, before making unit connections, carefully clean the heating system (pipes, radiators, etc.) with special pickling or de-scaling products to remove any deposits that could jeopardise proper hydronic module operation.

A chemical treatment of the heating system water is required, in compliance with the technical standards in force, in order to protect the system and the appliance from deposits (e.g. scale), slurry or other hazardous deposits.

Hydraulic connections must be made rationally, using the couplings on the hydronic module template.

Attention: Immergas declines all liability in the event of damage caused by the inclusion of automatic filling that is not its own brand.

In order to meet the system requirements established by EN 1717 regarding the pollution of drinking water, we recommend installing the IMMERGAS anti-backflow kit upstream of the hydronic unit cold water inlet connection. We also recommend using a category 1, 2 or 3 heat transfer fluid (ex: water + glycol) in the hydronic unit primary circuit (CH circuit), as defined in the EN 1717 standard.

Attention: *to preserve appliance duration and efficiency features, we recommend installing a suitable water treatment device if the water has features that can lead to limescale deposits.*

1.6 CONNECTING THE CHILLER LINE.

As far as connecting the chiller line is concerned, all the instructions contained in the Audax Pro condensing unit instructions booklet must be followed.
Make the connections directly on the hydronic module couplings, or use the rear outlet kit (optional).

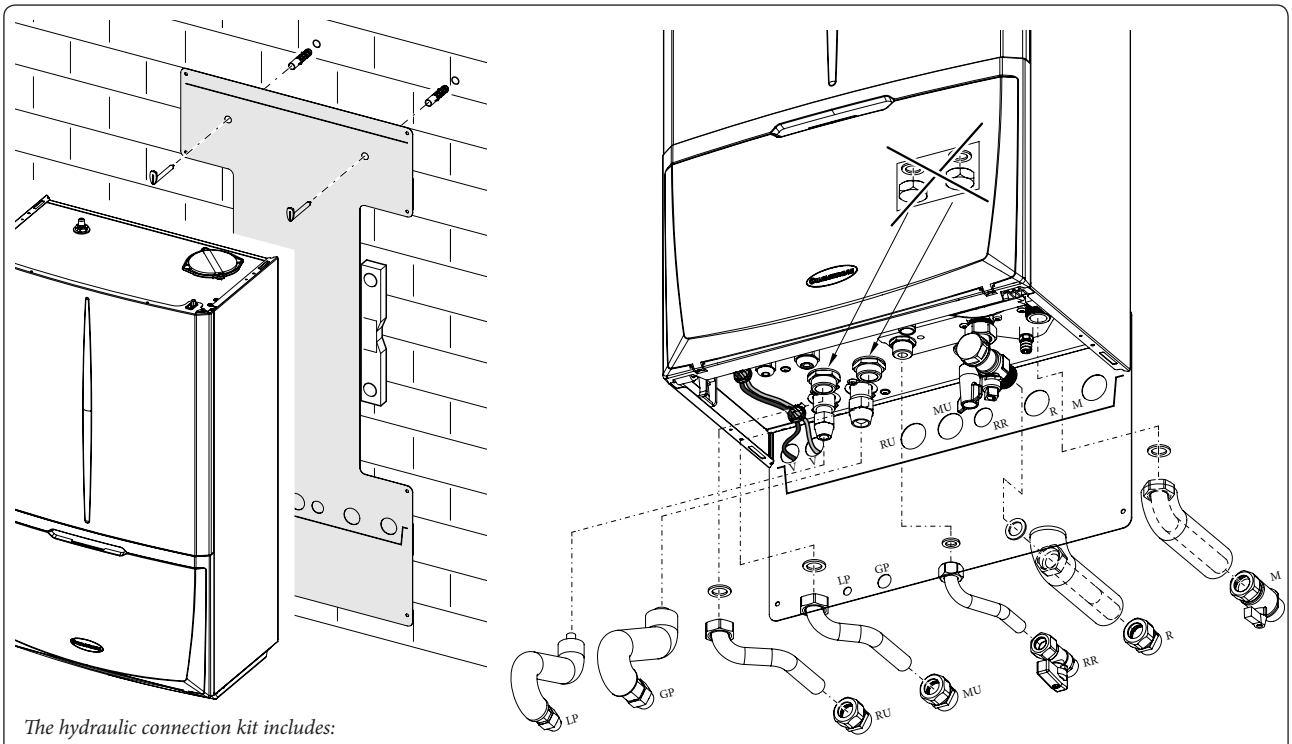

The hydraulic connection kit includes:

- *2 - adjustable expansion bolts*
- *2 - hydronic module support hooks*
- *1 - 3/4" storage tank unit return pipe (RU)*
- *1 - 3/4" storage tank unit flow pipe (MU)*
- *1 - 1/2" system filling pipe (RR)*
- *1 - 1/2" ball valve (RR)*
- *1 - 3/4" system return pipe (R)*
- *1 - 3/4" system flow pipe (M)*
- *1 - 3/4" ball valve (M)*
- *2 - Insulating sheath for system pipes (R - M)*
- *4 - 3/4" telescopic fittings (RU - MU - R)*

Gaskets, screws and seal O-Ring

Key:

- *V - Electrical connection*
- *RR - System filling*
- *RU - Storage tank unit return*
- *MU - Storage tank unit flow*
- *R - System return*
- *M - System flow*

LP-Chiller line - liquid phase
GP-Chiller line - gaseous phase

The R410A circuit wall connection kit (optional) includes:

- *1 - G 3/8" liquid phase chiller line pipe (LP)*
- *1 - G 5/8" gaseous phase chiller line pipe (GP)*

Already installed on the module:

- *1 - System interception tap with 3/4" filter (R)*

1-3

1.7 ELECTRIC CONNECTION.

The appliance has an IPX4D degree of protection; electrical safety of the appliance is achieved only when it is properly connected to an efficient earthing system, as specified by current safety standards.

Attention: Immergas S.p.A. declines any responsibility for damage or physical injury caused by failure to connect the hydronic module to an efficient earthing system or failure to comply with the reference standards.

- Connection cables must respect the prearranged routes. Use 3 clips (c) (not supplied) to group the individual cables (max. 1.5 mm^2 into the lower terminal board. Use the specific fairleads (d) on the left side, making sure to put at most 2 multi-polar cables (max 3 x 1 mm^2) in each fairlead.

  As an example, figure 1-5 shows cables in a hypothetical connection. To make the connections based on your own requirements, see the instructions below.

- **Open the control panel connections compartment (Fig. 1-5).**

  To carry out electrical connections, all you have to do is open the connections compartment as follows.

- Remove the front panel (Fig. 3-5b).
- Remove the cover (b fig. 1-4).
  1) Loosen the screws (a).
  2) Remove the cover (b) from the control panel (c).
- At this point, you can access the terminal board.

Also ensure that the electrical installation corresponds to the maximum absorbed power speci-

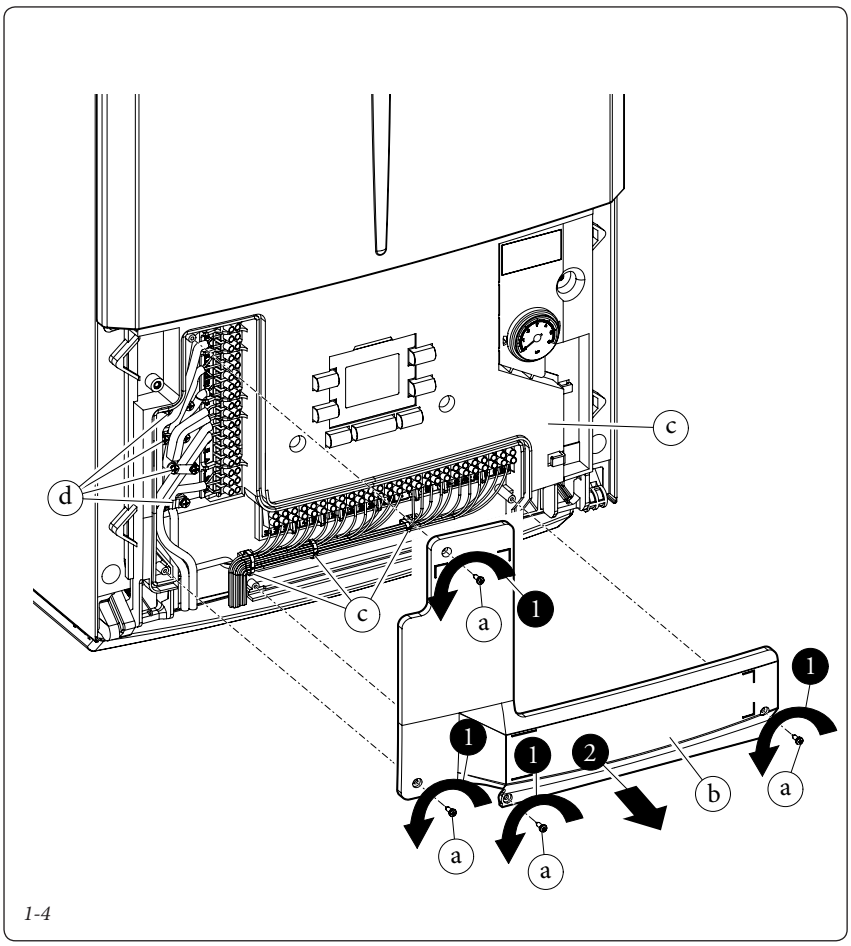

1-4

1-5

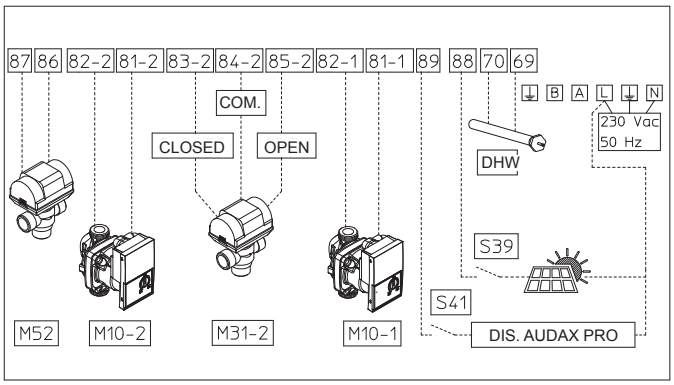

Key:

86 /87 - Summer winter switch 3-way valve
81-2 / 82-2 - Zone 2 circulator
83-2 / 84-2 / 85-2 - Zone 2 mixing valve
82-1 / 81-1 - Zone 1 circulator
89 / L - Audax Pro disabling contact
88 / L - Solar inlet
69 / 70 - Domestic hot water integrated resistance control
38 / 39 - External Probe
37 / 38 - Domestic hot water probe (eliminate R8)
42-1 / 43 - Zone 1 CAR^{V2}
42-2 / 43 - Zone 2 CAR^{V2}
23-1 / 24 - Zone 1 humidistat or humidity probe
23-2 / 24 - Zone 2 humidistat or humidity probe
25 - Humidity sensor supply voltage
29-1 / 30-1 - Zone 1 dehumidifier
29-2 / 30-2 - Zone 2 dehumidifier
T+ / T- (MC) - Audax Pro communication bus
T+ / T- (RS485) - Other Immergas appliance communication bus
41-1 / 40-1 - Zone 1 room thermostat
41-2 / 40-2 - Zone 2 room thermostat
66 / 65 - Puffer central heating probe
65 / 64-2 - Zone 2 flow probe

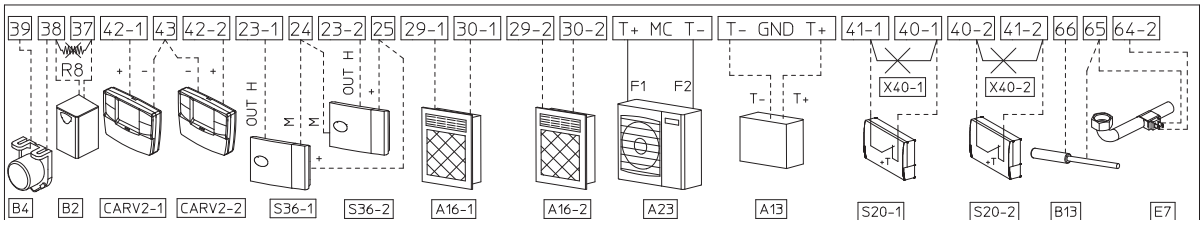

fications shown on the hydronic unit data plate. The hydronic units are supplied complete with a special "X"-type power cable without a plug. The power supply cable must be connected to a 230V ±10% / 50Hz mains supply respecting L-N polarity and earth connection; ⏚ this network must also have a multi-pole circuit breaker with class III over-voltage category.
To protect from possible dispersions of DC voltage, it is necessary to provide a type A differential safety device.
When replacing the power supply cable, contact a qualified company (e.g. the Immergas Authorised After-Sales Technical Assistance Service). The power cable must be laid as shown (Fig. 1-3).
If the fuses on the electronic boards must be replaced, use:
- P.C.B.: a T 3.5 A fuse
- heat pump communication board: a T 5.0 A fuse

For the main power supply to the appliance, never use adapters, multiple sockets or extension leads.

1.8 REMOTE CONTROLS AND ROOM CHRONO-THERMOSTATS (OPTIONAL).

The hydronic module is set up for room chrono-thermostats or remote controls, available as optional kits (Fig. 1-6). A maximum of 2 thermo-regulators can be applied directly to the appliance.
All Immergas chrono-thermostats are connected with 2 wires only. Carefully read the user and assembly instructions contained in the accessory kit.

- On/Off Immergas digital chrono-thermostat. The chrono-thermostat allows:
  - set two room temperature value: one for daytime (comfort temperature) and one for night-time (reduced temperature);
  - set a weekly program with four daily switch on and switch off times;
  - select the required operating mode from the various possible alternatives:
  - manual operation (with adjustable temperature).
  - automatic operation (with set programme).
  - forced automatic operation (momentarily changing the temperature of the automatic programme).

  The chrono-thermostat is powered by two 1.5V LR 6 type alkaline batteries.
- Comando Amico Remoto Remote Control Device ^{V2} (CAR^{V2}) with climate chrono-thermostat function. In addition to the functions described in the previous point, the CAR^{V2} panel enables the user to control all the important information regarding operation of the appliance and the heating system with the opportunity to easily intervene on the previously set parameters, without having to go to where the appliance is installed. The panel is equipped with self-diagnosis to show any appliance operating anomalies on the display. The climate chrono-thermostat incorporated into the remote panel enables the system flow temperature to be adjusted to the actual needs of the room being heated or cooled, in order to obtain the desired room temperature with extreme precision and therefore with evident savings in running costs. The CAR^{V2} is powered directly by the hydronic module by the same 2 wires used to transmit data between the hydronic module and the device.

Important: the hydronic module is set up to be able to work with two CAR^{V2} used to control two separate hydraulic zones.

Comando Amico Remoto Remote Control ^{V2} or On/Off chrono-thermostat electrical connections (Optional). *The operations described below must be performed after having removed the voltage from the appliance.*

-On/Off ambient thermostat or chrono-thermostat: must be connected to the 40-1 / 41-1 terminals, eliminating the X40-1 jumper for zone 1 and 40-1 / 41-1 for zone 2. Make sure that the On/Off thermostat contact is of the "clean" type, i.e. independent of the mains voltage, otherwise the P.C.B. would be damaged.

- ^{V2} Comando Amico Remoto remote control must be connected to terminals 42-1 / 43 for zone 1 and 42-2 / 43 for zone 2, keeping the X40-1 jumper for the CAR^{V2} in zone 1 and adding another one for zone 2 on terminals 40-2 and 41-2, being careful not to invert polarity in the connections.

The connections must be made on the terminal board inside the appliance control panel as described in figure 1-5.

Important: if the Comando Amico Remoto Remote Control ^{V2} or any other On/Off chrono-thermostat is used, arrange two separate lines in compliance with current regulations regarding electrical systems. The hydronic module pipes must never be used to earth the electrical or telephone system. Make sure this does not happen before making the hydronic module electrical connections.

1.9 EXTERNAL TEMPERATURE PROBE.

In general, Magis Pro ErP uses the probe standard supplied on the condensing unit to read the outdoor temperature.

If the condensing unit is positioned in an area that is not suitable for temperature reading, it is advisable to use an additional external probe (Fig. 1-7), which is available as an optional kit. Refer to the relative instruction sheet to position the optional external probe.

The probe can be connected directly to the hydronic module electrical system and allows the system flow temperature to be set automatically based on the outdoor temperature in order to adapt the heat or cooling provided to the system. The external probe always operates when connected, regardless of the presence or type of room chrono-thermostat used and can work in combination with Immergas chrono-thermostats.

The correlation between system flow temperature and outdoor temperature is managed differently based on whether the system is managed directly by the hydronic module or by the CAR^{V2}; the parameters set on the chrono-thermostat take priority over those set on the hydronic module.
- Hydronic module: the system flow temperature is determined by the setting on the "Heat regulation" menu and by the "User" menu for the offset values based on the curves shown in the diagram (Fig. 1-8).
- CAR^{V2}: the system flow temperature is determined by the setting on the central heating selector (which can be adjusted from 0 to 9) and by the "Offset" value on the "Regulat." menu based on the curves shown in the corresponding instructions booklet.

N.B.: if the system is divided into two zones, the flow temperature is calculated based on the zone with the higher temperature in central heating mode and with the lower temperature in cooling mode.

The electric connection of the external probe must be made on terminals 38 and 39 on the terminal board on the hydronic module control panel (Fig. 1-5).

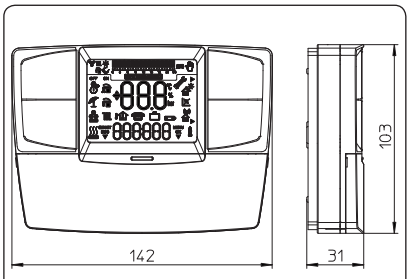

1-6

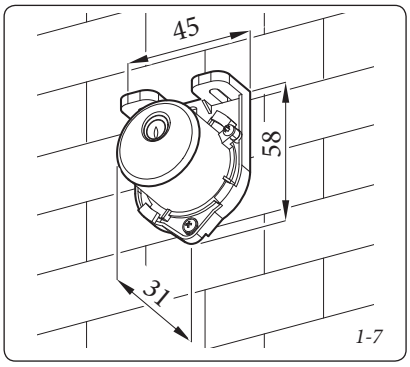

1-7

1.10 HEAT REGULATION SETTING.
By setting the parameters in the "Heat regulation" menu, you can adjust how the system operates. The curves (Fig. 1-8) show the default settings in the various operating modes available both with external probe and without.

Zone 1 flow temperature in central heating mode, with external probe

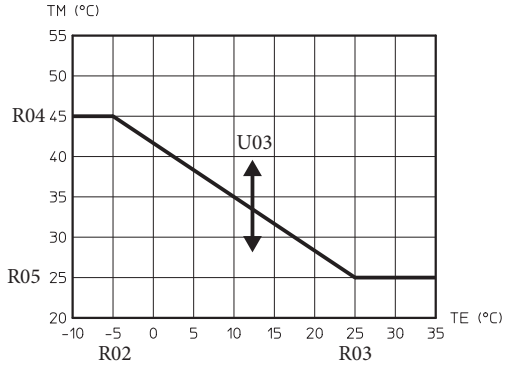

Zone 2 mixed flow temperature in central heating mode, with external probe

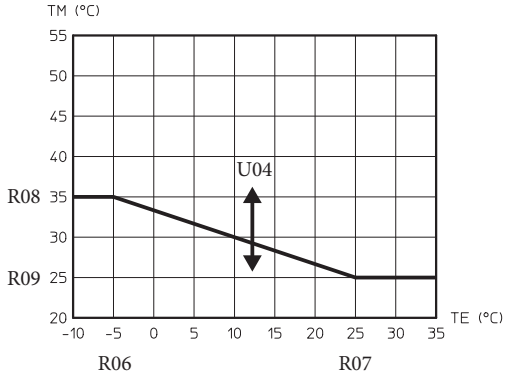

Zone 1 flow temperature in cooling mode, with external probe

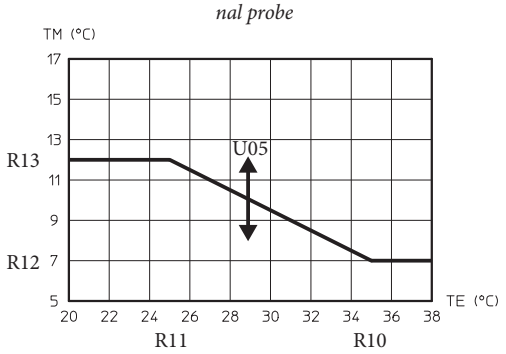

Zone 2 mixed flow temperature in cooling mode, with external probe

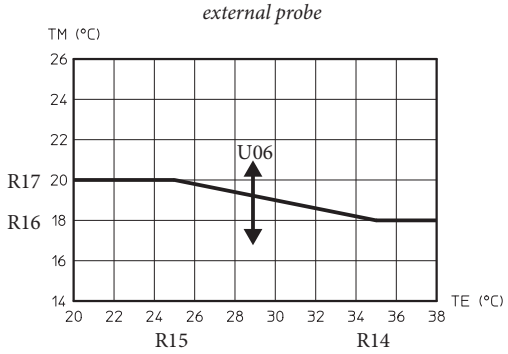

Flow temperature in central heating mode without external probe

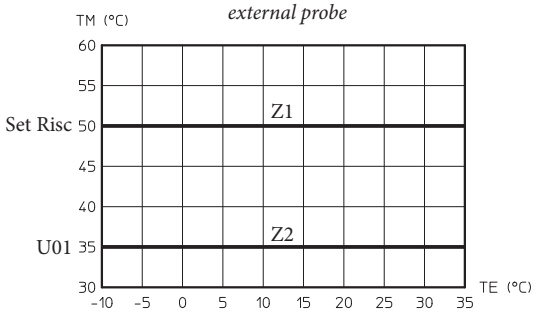

Flow temperature in cooling mode without external probe

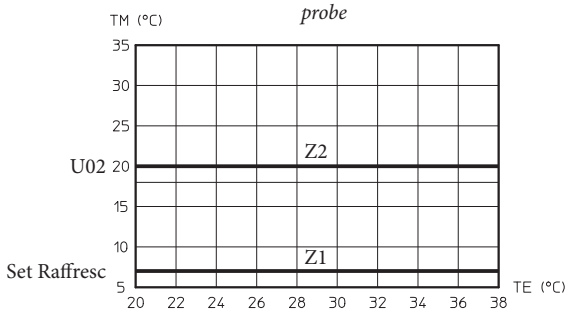

Key:
- *Rxx - "Heat regulation" menu parameter*
- *TE - Outdoor temperature*
- *TM - Flow temperature*
- *U01 - Zone 2 flow temperature in "User" menu central heating mode*
- *U02 - Zone 2 flow temperature in "User" menu cooling mode*
- *U03÷06 - Offset value compared to the curve set by the external probe*
- *Zx - Heating system zone*

1-8

1.11 FILLING THE SYSTEM.

Once the hydronic module is connected, fill the heating system using the filling cock (Fig. 1-33 and 1-4). Filling must be done slowly to allow the air bubbles in the water to escape through the vents in the hydronic module and the heating and air conditioning system.
The hydronic module has one incorporated automatic vent valve located on the circulator and another on the central heating manifold. *Make sure that the hoods are loosened.*
The filling cock must be closed when the hydronic module pressure gauge indicates approximately 1.2 bar.

N.B.: during these operations, enable the "Venting" functions by setting the "M01" parameter to ON, which lasts about 18 hours (see the "P.C.B. programming" paragraph).

System minimum water content.
Minimum water content is mainly important to provide **proper execution of defrosting cycles**. To this end, the minimum amount of water to guarantee is **7 l/kW** for any type of system.

N.B.: it is also important to check that the dehumidifier line has a minimum of 3 l/kW (dehumidifier hydraulic circuit connection).

1.12 OPERATING LIMITS.

The system was designed to work in a specific range of temperatures and at a specific maximum flow temperature. The graphic (Fig. 1-9) shows these limits.

1.13 COMMISSIONING THE HYDRONIC MODULE (IGNITION).

The following requirements must be met to commission the hydronic module in order to issue the Declaration of Conformity, if required by the technical standards in force (the following operations must be done only by professionally qualified personnel and in the presence of professionals only):

- check that the internal system is properly sealed according to the specifications set forth by technical regulations in force;
- check connection to a 230V-50Hz power mains, correct L-N polarity and earthing connection;
- switch on the hydronic module and check for proper ignition;
- check the operation of the main switch located upstream of the hydronic module and on the module itself;

Should even just one of these checks have a negative outcome, the system must not be commissioned.

Operating limits in central heating mode

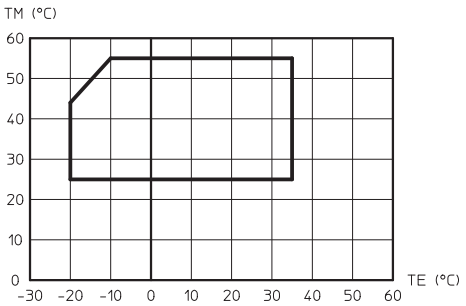

Operating limits in cooling mode

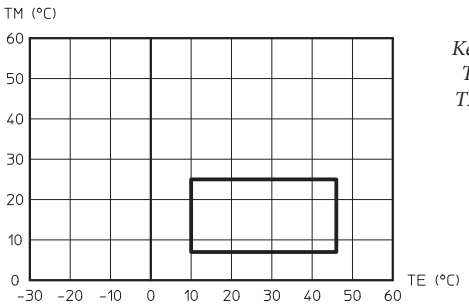

Key:
TE = Outdoor temperature.
TM = Flow temperature

1-9

1.14 CIRCULATION PUMP.
The hydronic modules are supplied with a variable speed circulator, which operates at the speed set in the "A04" parameter (which can be set between 55% and 100%). The minimum speed set on the "A03" parameter is used for special functions (e.g. pump anti-locking function).

Attention: for proper system operation, make sure that the minimum flow in operating conditions never drops below 500 l/h.

Pump release. If, after a prolonged period of inactivity, the circulation pump is blocked, turn the motor shaft using a screwdriver. Take great care during this operation to avoid damage to the motor.

By-pass Regulation (part. 17 Fig. 1-11). The hydronic module comes out of the factory with the by-pass closed.
If necessary, the by-pass can be regulated to system requirements from minimum (by-pass closed) to maximum (by-pass open). Adjust using a flat head screwdriver, turn clockwise and open the by-pass, anticlockwise it is closed.

Total head available to the system.

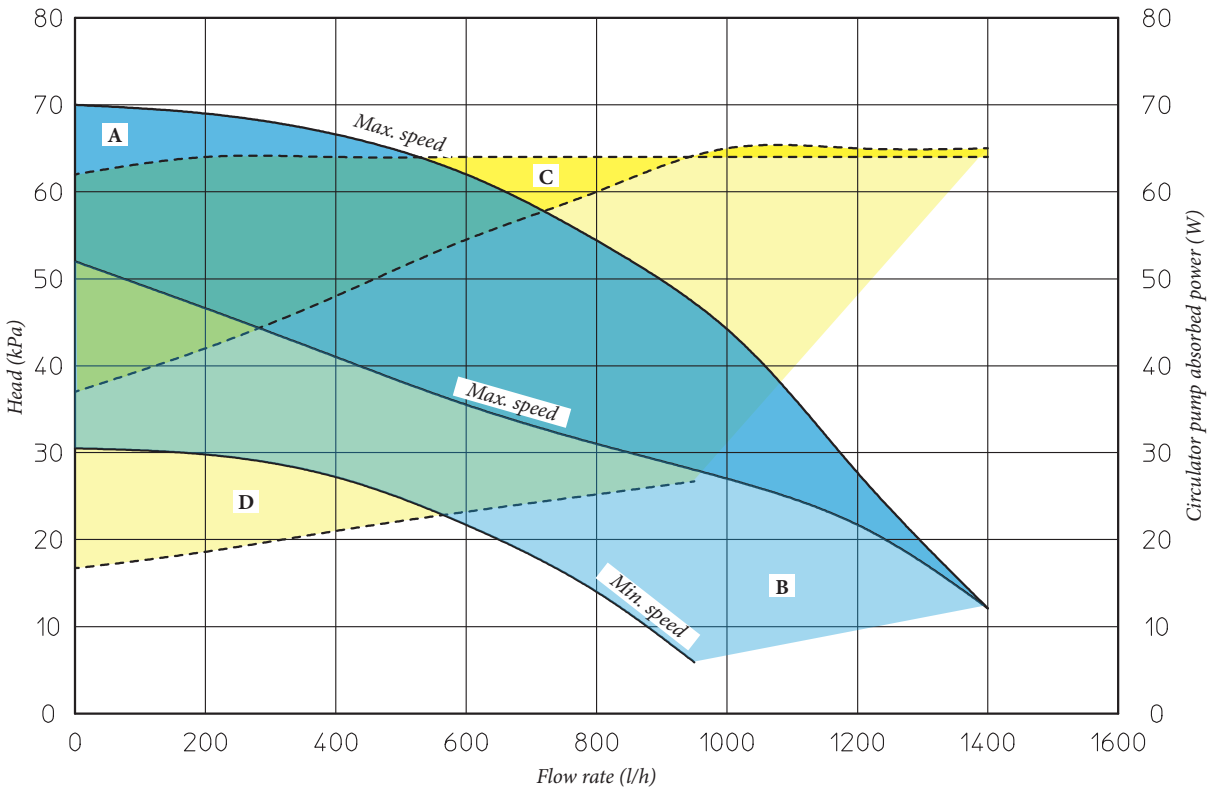

A+B = Head available with by-pass closed
B = Head available with by-pass open
C+D = Power absorbed by the pump with by-pass open (dotted area)
D = Power absorbed by the pump with by-pass closed (dotted area)

1-10

1.15 HYDRONIC MODULE COMPONENTS.

1-11

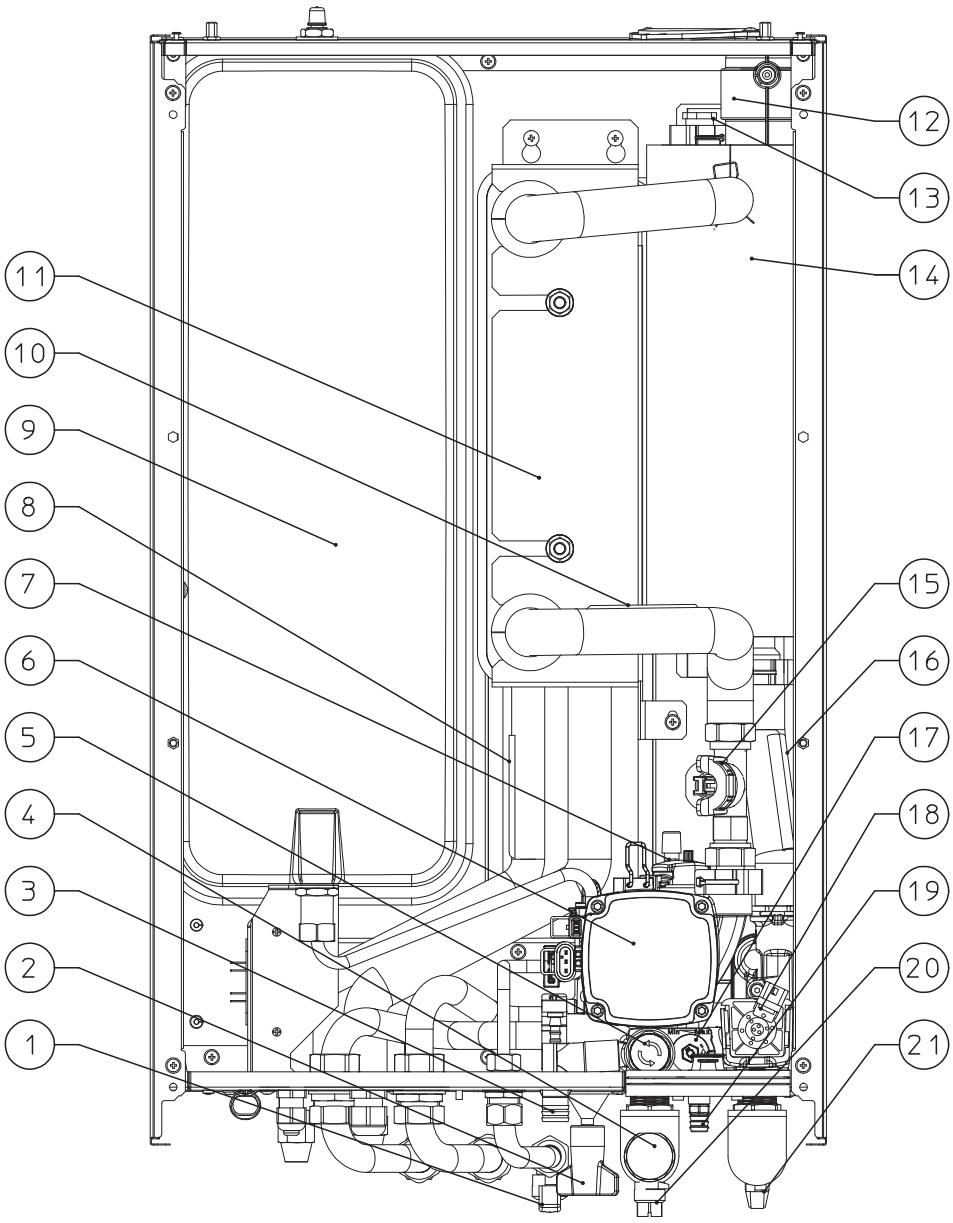

Key:

1 - Domestic hot water inlet valve
2 - System filling valve
3 - 3-bar safety valve drain fitting
4 - Inspectable filter
5 - 3 bar safety valve
6 - Hydronic unit circulator
7 - Vent valve
8 - Liquid phase detection probe
9 - System expansion vessel
10 - Flow probe
11 - Plate heat exchanger
12 - Vent valve
13 - Central heating integrated electrical resistance cap (optional)
14 - Central heating manifold
15 - System flow meter
16 - Return probe
17 - By-pass
18 - Three-way valve (motorised)
19 - System draining valve
20 - System cut-off tap
21 - System cut-off tap

1.16 KITS AVAILABLE ON REQUEST.

- 3 kW heating system integrated resistance kit. Should it be necessary, you can install an electrical resistance to supplement the central heating system; this resistance can be installed directly inside the hydronic module.
- 2 zone kit (1 direct and 1 mixed). Should it be necessary, you can install the zone kit, which allows you to divide the heating system into two separate zones - one direct and one mixed.
- Configurable relay interface kit. The module is set up for a relay board, which amplifies the appliance features and, thus, the operating possibilities.
- 2 relay board kit. The hydronic module can manage up to two dehumidifiers. A 2 relay board that manages dehumidifier enabling is available to pair the appliances.
- R410A circuit connection kit. For R410A circuit wall connections, there is a kit with the two pipes necessary to create the circuit.

The above-mentioned kits are supplied complete with instructions for assembly and use.

2 USE AND MAINTENANCE INSTRUCTIONS

2.1 CLEANING AND MAINTENANCE.

Attention: to preserve system integrity and keep the distinguishing safety features, performance and reliability unchanged over time, you must execute maintenance operations at least on a yearly basis in compliance with what is stated in the point regarding "annual appliance check and maintenance". Annual maintenance is essential to validate the conventional warranty of Immergas. We recommend stipulating a yearly cleaning and maintenance contract with your zone Immergas Authorised After-sales Service.

2.2 GENERAL WARNINGS.

Do not expose the hydronic module to direct steam from cooking surfaces.
Children and unskilled persons are not allowed to use the hydronic module.
Should you decide to temporarily shut down the hydronic module, you must:

a) drain the heating system if antifreeze is not used;

b) shut off the electrical and water supply.

Never clean the appliance or connected parts with easily flammable substances.
Never leave containers or flammable substances in the same environment as the appliance.

- **Attention:** using any components that use electrical power requires some fundamental rules to be observed:
  - do not touch the appliance with wet or moist parts of the body; do not touch when barefoot;
  - never pull electrical cables or leave the appliance exposed to weathering (rain, sunlight, etc.);
  - the appliance power cable must not be replaced by the user;
  - in the event of damage to the cable, switch off the appliance and contact exclusively qualified staff for replacement;
  - if the appliance is not to be used for a certain period, disconnect the main power switch.

N.B.: the temperatures shown on the display have a tolerance of +/- 3°C due to environmental conditions that cannot be attributed to the hydronic module.

At the end of its service life, the appliance must not be disposed of like normal household waste nor abandoned in the environment, but must be removed by a professionally authorised company. Contact the manufacturer for disposal instructions.

2.3 CONTROL PANEL.

2-1

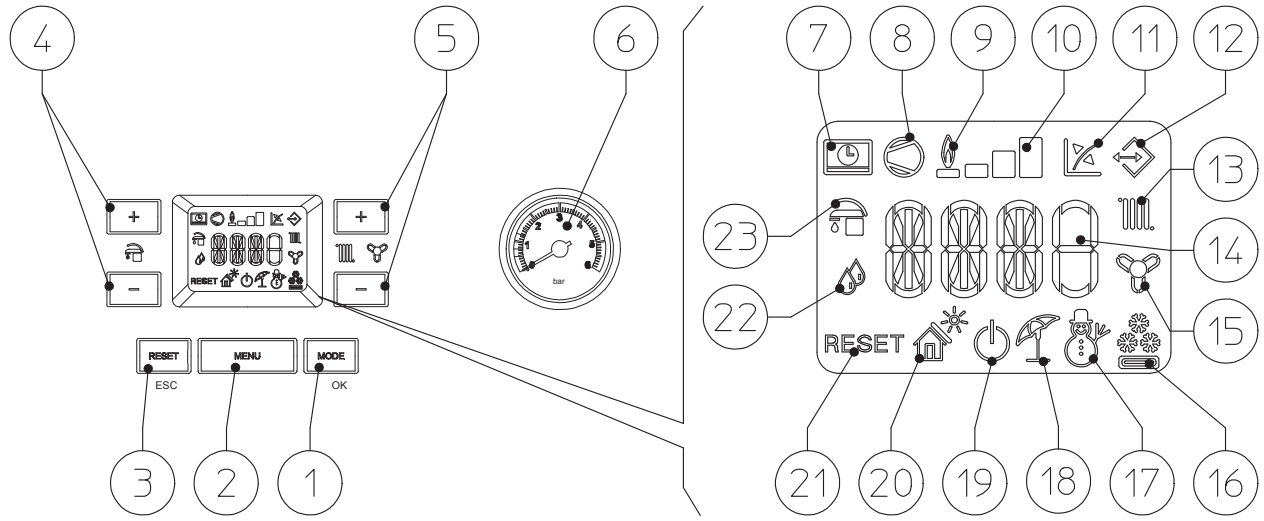

Key:

1 - *Operating mode (winter - heating/air conditioning - summer - stand-by - off) and parameter confirm button*
2 - *Menu selection button*
3 - *Reset and exit menu button*
4 - *Domestic hot water temperature selection buttons*
5 - *Heating system temperature selection buttons*
6 - *Hydronic module pressure gauge*
7 - *Remote control connection (optional)*
8 - *Condensing unit operation in progress*
9 - *Not used*
10 - *Dispensed output level*
11 - *Operation with external temperature probe active (optional)*
12 - *Connection to other Immergas units*
13 - *Room central heating mode active*
14 - *Temperature indicator, hydronic module info and error codes*
15 - *Room cooling mode operation active*
16 - *Operation in cooling mode*
17 - *Operation in winter mode*
18 - *Operation in summer mode*
19 - *Stand-by mode*
20 - *Not used*
21 - *Hydronic module locked, requiring release by "RESET" button*
22 - *Operation in dehumidification mode*
23 - *DHW production phase operating mode active*

2.4 SYSTEM USE.

Before ignition, make sure the system is full of water, checking that the pressure gauge needle (6) points to a value between 1 and 1.2 bar and make sure that the chiller circuit has been filled as described in the condensing unit instructions booklet.

- Press the button (1) until the display switches on. The system now goes back to the state prior to switch-off.
- If the hydronic module is in stand-by, press the button (1) again to activate it. Otherwise, go to the next point.
- Then press the button (1) in sequence and set the system to summer ( ), winter ( ) or heating/air conditioning ( ) position.

• **Summer ( ):** in this mode, the system only works to produce domestic hot water, the temperature is set using the buttons (4) and the corresponding temperature is shown on the display by the indicator (14).

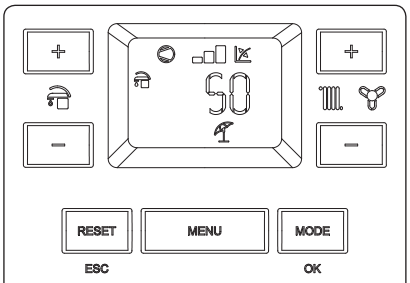

Summer and DHW heating in progress mode 2-2

• **Winter ( ):** in this mode, the system works both to product domestic how water and room central heating. The temperature of the DHW is always regulated via buttons (4), the central heating temperature is regulated via buttons (5) and the relative temperature is shown on the display by the indicator (14).

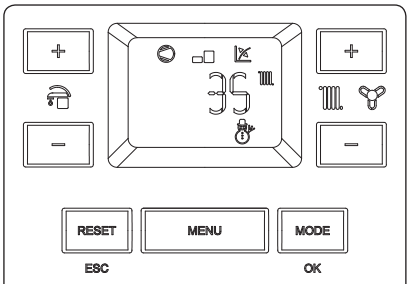

Winter and room central heating in progress mode 2-3

• **Heating/air conditioning ( ):** in this mode, the system works both to produce DHW and to cool the room. The temperature of the DHW is always regulated via buttons (4), the cooling temperature is regulated via buttons (6) and the relative temperature is shown on the display by the indicator (14).

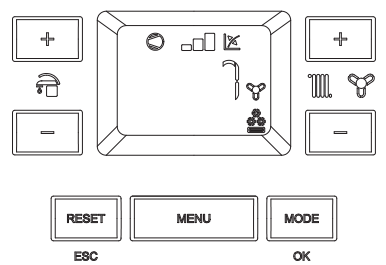

Heating/Air conditioning and room cooling in progress mode 2-4

From here on, the system works automatically. If there are no requests (room central heating, DHW production or cooling), the system goes into the "stand-by" function. Each time the condensing unit ignites, the display shows the corresponding symbol (8) with the corresponding power scale (10).

• **Operation with Comando Amico Remoto^{V2} (CAR^{V2}) (Optional)**. If the CAR^{V2} is connected, the ( ) symbol will appear on the display. The system regulation parameters can be set via the CAR^{V2} control panel and the reset button (3) remains active on the hydronic module control panel, along with the switch-off button (1) ("off" mode only) and the display showing the functioning state.

The system is set up to manage two CAR^{V2}. The CAR^{V2} connected to the main zone (zone 2 or low temperature) is considered as the hydronic module mount panel, while the CAR^{V2} connected to the secondary zone (zone 1 or high temperature) manages the requests in the corresponding zone. Consequently, the "secondary" CAR^{V2} is not to be considered as the hydronic module mount panel.

Attention: if the hydronic module is switched "off" the CAR^{V2} will display the connection error symbol "ERR>CM". The CAR^{V2} is still powered constantly so as not to lose the saved programs.

•**Operation with external probe ( ).** The system is set up to use the condensing unit external probe or an optional external probe. With the external probe connected, the system flow temperature for room heating and air conditioning is managed by the external probe based on the outdoor temperature measured (Parag. 1.9). You can change the flow temperature by choosing the offset value in the specific user menu. If the CAR^{V2} is connected, you can change the operating curve using the controls on it, selecting a value from "0 to 9" (See CAR^{V2} instructions). In this case, any settings made on the hydronic module will not affect system operation.

• **Dehumidify ( ).** If the system is paired with a humidistat (optional) or a humidity temperature sensor (optional), you can manage the room humidity in summer air conditioning mode.

- If paired with a humidistat, set the degree of humidity on the humidistat itself (see the instructions booklet).
- If paired with a humidity temperature sensor, set the humidity percentage in the corresponding user menu or, if there is a CAR^{V2}, you can set it on the remote control itself from the "S UR %" parameter.

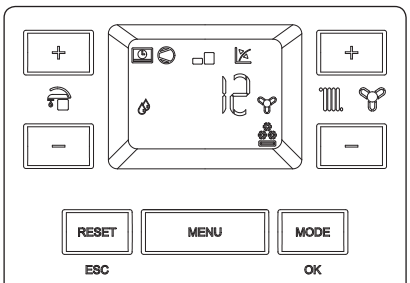

Heating/Air conditioning and Dehumidification active mode 2-5

• In central heating or cooling request mode, if the temperature of the water in the system meets the request, the system can work simply by activating the circulator.

• **"Stand-by" mode.** Press button (1) repeatedly until the symbol ( ) appears. From then on, the system remains inactive and the antifreeze function, pump anti-block function and 3-way and signalling of any anomalies is guaranteed.

N.B.: in these conditions the system must still be considered powered.

• **"Off" mode.** By holding the button (1) down for 8 seconds, the display switches off and the hydronic module is completely off. The safety functions are not guaranteed in this mode.

N.B.: in these conditions, the hydronic module must still be considered powered even if there are no functions active.

• **"Automatic vent" mode.** Every time the hydronic module is electrically powered, the system automatic vent function is activated (lasting 8 minutes). This function is displayed via a countdown signalled by the indicator (14). During this period the DHW and CH functions are not active.

The "automatic vent" can be annulled by pressing the "reset" button (3).

• **Display operation.** The display lights up while the control panel is being used; after a set inactivity period, the brightness drops until only the active symbols are displayed. The lighting mode can be varied via parameter t8 in the P.C.B. programming menu.

2.5 TROUBLESHOOTING.

The hydronic module signals any anomalies by flashing a code on the display (14) according to the following table.

Hydronic module error codes are preceded by the letter "E", while error codes referring to the condensing unit are preceded by the letter "A". For the latter, refer to the condensing unit booklet for the complete list of all the anomalies.

The CAR^{V2} displays error codes with only the last two digits (e.g. E184 = ERR 84).

Error Code	Anomaly signalled	Cause	Hydronic module status / Solution
E 2	**Safety thermostat block (over-temperature)**	During normal operation, if a fault causes excessive overheating internally, the boiler goes into overheating block.	Press the Reset button (1)
E 5	**Flow probe anomaly**	The board detects an anomaly on the flow NTC probe.	The system does not start (1).
E 12	**Storage tank probe anomaly**	The board detects an anomaly on the storage tank probe	The hydronic module is unable to produce domestic hot water (1).
E 23	**Return probe anomaly**	The board detects an anomaly on the return NTC probe	The system does not start (1).
E 24	**Push button control panel anomaly**	The board detects an anomaly on the pushbutton panel.	If normal conditions are restored, the system restarts without having to be reset (1).
E 26	**System flowmeter anomaly**	The board detects an anomaly on the system flowmeter. Return pump (optional) always working.	The system does not start (1). Make sure the return pump (optional) only activates when requested.
E 27	**Insufficient circulation**	This happens when the hydronic module overheats due to poor water circulation in the primary circuit. The causes can be: - low system circulation; check that no shut-off devices are closed on the central heating circuit and that the system is free of air (deaerated); - pump blocked; free the pump.	Press the Reset button (1).
E 31	**Loss of communication with the CAR^{V2} (zone 1)**	This happens when an incompatible remote control is connected or when communication between the hydronic module and CAR^{V2} is lost.	Cut power to the hydronic module then power it back on. If the Remote Control is still not detected at restart, the system will switch to local operating mode, i.e. using the controls on the control panel. In this case the "Central Heating" (1) mode cannot be activated.
E 32	**Low temperature zone 2 probe anomaly**	If the board detects an anomaly on the low temperature zone 2 probe, the system cannot work in the affected area.	(1)
E 37	**Low power supply voltage**	This occurs when the power supply voltage is lower than the allowed limits for correct system operation.	If normal conditions are restored, the system restarts without having to be reset (1)
46	**Low temperature safety thermostat (optional)**	During normal operation, if an anomaly causes excessive overheating of the flow temperature in the low temperature zone, the unit indicates the malfunction.	The unit does not meet the zone central heating requirement. (1)
E 50	**External probe missing or faulty**	In the event the external probe is not connected or is faulty, the anomaly is indicated.	Check the external probe connection. The system continues to operate with the external probe integrated in the condensing unit (1).
E 54	**Central heating storage tank probe anomaly (optional)**	The central heating storage tank has an out of range resistive value	Puffer mode is disabled. (1)
E 129	**Zone 1 humidity probe anomaly**	Anomaly on the zone 1 humidity probe (optional). Zone humidity cannot be checked.	In addition to the humidity, the dew point is not calculated for the zone (1) either
E 130	**Zone 2 humidity probe anomaly**	Anomaly on the zone 2 humidity probe (optional). Zone humidity cannot be checked.	In addition to the humidity, the dew point is not calculated for the zone (1) either
E177	**DHW maximum time alarm**	Domestic hot water production is not met within the pre-established time	The system continues to operate with non-optimal performance (1)
E178	**Anti-Legionella cycle not successful**	The anti-Legionella cycle is run without success within the pre-established time	(1)
E179	**Liquid phase probe anomaly**	The board detects an anomaly on the liquid phase NTC probe.	The system does not start (1).
(1) If the block or anomaly persists, contact an authorised company (e.g. Immergas Technical After-Sales Service).			

Error Code	Anomaly signalled	Cause	Hydronic module status / Solution
E181	**Loss of communication with the CAR^{V2} (zone 2)**	This happens when an incompatible remote control is connected or when communication between the hydronic module and second zone CAR^{V2} is lost.	Cut power to the hydronic module then power it back on. If the Remote Control is still not detected at restart, the system will switch to local operating mode, i.e. using the controls on the control panel. In this case the "Central Heating" (1) mode cannot be activated.
E182	**Condensing unit alarm**	An anomaly appears on the condensing unit	The system does not work, see the anomaly on the condensing unit and its instructions booklet (1)
E183	**Condensing unit in test mode**	A signal notifies that the condensing unit is in test mode	During this time, room heating/air conditioning and domestic hot water production requirements cannot be met
E184	**Communication error with condensing unit**	A signal notifies an anomaly due to a communication problem between the hydronic module and the condensing unit.	Have the electrical connection between the units checked. The system does not start (1).
E188	**Request with temperature out of range**	A request is made with the outdoor temperature exceeding the operating limits (parag. 1.12)	The system does not start (1).
E189	**Time out alarm with communication board**	If communication between the printed circuit boards is lost, an anomaly is signalled.	(1)
(1) If the block or anomaly persists, contact an authorised company (e.g. Immergas Technical After-Sales Service).			

2.6 PARAMETERS AND INFORMATION MENU.

Pressing the "MENU" button (2), the display cyclically shows the "Data" menu, "User" menu and a menu protected by a "0000" access code with the first flashing digit reserved for a qualified technician.

To access an individual menu, once it appears, press the "OK" button (1).

To scroll through the menu items and to edit the values, use the DHW temperature regulation buttons (4). Pressing the "OK" button (1) confirms the parameter, pressing the "ESC" button (3) goes back to the previous menu or exits.

A minute after the last operation, the system automatically exits any of the menus.

Data Menu.

Id Parameter	Description	Range
D 03	Storage tank unit temperature	0 ÷ 99 °C
D 04	Value calculated for system setting	0 ÷ 99 °C
D 05	Value set for DHW setting	0 ÷ 99 °C
D 06	Outdoor temperature (if the condensing unit external probe is connected or if the optional external probe is available)	- 20 ÷ 50 °C
D 08	System return water temperature	0 ÷ 99 °C
D 09	List of the last five anomalies. (to scroll through the list, press the "OK" button (1))	D91 ÷ D95
D 10	Anomaly list reset. Once "D 10" is displayed, press the "OK" button. Deletion is confirmed via the "88" symbols flashing for two seconds.	-
D 14	Circulator flow rate	0 ÷ 9999 (x 100 l/h)
D 20	System flow temperature	0 ÷ 99 °C
D 22	DHW 3-way (DHW = domestic hot water, CH = central heating)	DHW - CH
D 24	Chiller circuit liquid temperature	- 20 ÷ 99 °C
D 25	Zone 2 flow temperature (if configured)	0 ÷ 99 °C
D 26	Probe for primary solar storage (puffer)	0 ÷ 99 °C
D 28	System circulator instantaneous speed	0 ÷ 100 %
D 31	DHW integration function	OFF - ON
D 32	System integration function	OFF - ON
D 35	Solar system inlet	OFF - ON
D 41	Zone 1 relative humidity	0 ÷ 99 %
D 42	Zone 2 relative humidity	0 ÷ 99 %
D 43	Zone 1 humidistat	OFF - ON
D 44	Zone 2 humidistat	OFF - ON
D 45	Dehumidifier zone 1	OFF - ON
D 46	Dehumidifier zone 2	OFF - ON
D 47	Zone 1 circulator pump	OFF - ON
D 48	Zone 2 circulator pump	OFF - ON
D 49	Central heating / cooling system separation 3-way (CL = cooling, HT = heating)	CL - HT
D 51	Zone 1 remote control	OFF - ON
D 52	Zone 2 remote control	OFF - ON
D 53	System setting with remote connection in zone 1	0 ÷ 99 °C
D 54	System setting with remote connection in zone 2	0 ÷ 99 °C
D 55	Zone 1 thermostat	OFF - ON
D 56	Zone 2 thermostat	OFF - ON
D 61	Appliance model definition	MP
D 62	Communication with outdoor condensing unit	OFF - ON
D 63	Communication with other Immergas devices	OFF - ON
D 71	Condensing unit operating frequency	0 ÷ 150 Hz
D 72	Condensing unit compressor temperature	0 ÷ 200 °C
D 73	Compressor outlet instantaneous temperature	0 ÷ 100 °C
D 74	Evaporator coil temperature	0 ÷ 100 °C
D 75	Condensing unit compressor absorption	0 ÷ 10 A
D 76	Condensing unit fan speed	0 ÷ 100 rpm
D 77	Electronic expansion valve position	0 ÷ 500
D 78	4-way side (CL = cooling, HT = heating)	HT / CL
D 91	Software version	

User Menu.

Id Parameter	Description		Range	Default	Value range
U 01	Zone 2 central heating setting		25 ÷ 55 °C	25	
U 02	Zone 2 cooling setting		7 ÷ 25 °C	20	
U 03	Zone 1 central heating offset	You can edit the flow temperature with respect to the external probe regulation curve in central heating mode (Fig. 1-xx Offset value)	- 15 ÷ + 15 °C	0	
U 04	Zone 2 central heating offset		- 15 ÷ + 15 °C	0	
U 05	Zone 1 central heating offset	You can edit the flow temperature with respect to the external probe regulation curve in cooling mode (Fig. 1-xx Offset value)	- 15 ÷ + 15 °C	0	
U 06	Zone 2 central heating offset		- 15 ÷ + 15 °C	0	
U 07	Zone 1 humidity setting	The humidity temperature sensor (optional) defines room humidity in the corresponding area	30 ÷ 70 °C	50	
U 08	Zone 2 humidity setting		30 ÷ 70 °C	50	
U 11	Night function	This function can only be activated if CAR^{V2} (optional) is available Activating the function allows you to disable condensing unit operation during the time slot set in the U 12 and U 13 parameters. Make sure the additional power sources needed to meet potential requirements that may present themselves during active operation are available (e.g. additional resistances)	OFF - ON	OFF	
U 12	Night function enabling time		0 ÷ 23	0	
U 13	Night function disabling time		0 ÷ 23	0	

N.B.: the parameters referring to zone 2 can only be displayed if there is a zone 2 on the system and it is configured correctly.

2.7 SWITCHING OFF THE HYDRONIC MODULE.

Switch off the hydronic module, putting it in "off" mode. Switch off the omni-polar switch outside the unit. Never leave the unit powered if left unused for prolonged periods.

2.8 RESTORING CENTRAL HEATING SYSTEM PRESSURE.

Periodically check the system water pressure. The hydronic module pressure gauge must show a value between 1 and 1.2 bar.

If the pressure is less than 1 bar (with the system cold), you must restore it using the cock located at the bottom of the unit (Fig. 1-3).

N.B.: close the cock after the operation.

If pressure values reach around 3 bar the safety valve may be activated.

In this case, remove water from an air vent valve of a radiator until reaching pressure of 1 bar, or ask for assistance from professionally qualified personnel.

In the event of frequent pressure drops, contact qualified staff for assistance to eliminate the possible system leakage.

2.9 SYSTEM DRAINING.

To drain the hydronic mdule, use the special drain tap (Fig. 1-3).

Before draining, ensure that the filling cock is closed.

2.10 ANTI-FREEZE PROTECTION.

The hydronic module has an anti-freeze function that automatically switches on the condensing unit when the temperature drops below 4°C (standard protection up to a minimum temperature of -5°C). All information relative to the anti-freeze protection is stated in Par. 1.3. In order to guarantee the integrity of the appliance and the domestic hot water heating system in areas where the temperature drops below zero, we recommend protecting the central heating system using anti-freeze liquid and installing the Immergas Anti-freeze Kit in the hydronic module. In the case of prolonged inactivity (second case), we also recommend that:

- disconnect the electric power supply;
- completely empty the central heating circuit and the hydronic module domestic hot water circuit. In systems that are drained frequently, filling must be carried out with suitably treated water to eliminate hardness that can cause limescale.

2.11 CASE CLEANING.

Use damp cloths and neutral detergent to clean the hydronic module casing. Never use abrasive or powder detergents.

2.12 DECOMMISSIONING.

Should the system be shut down permanently, have professional staff carry out the procedures, making sure that the electrical and water supply lines have been previously shut off.

3 COMMISSIONING THE PACKAGE (INITIAL CHECK)

To commission the package, you must:
- make sure that the declaration of conformity for installation is supplied with the appliance;
- check connection to a 230V-50Hz power mains, correct L-N polarity and the earthing connection;
- make sure the central heating system is filled with water and the hydronic module pressure gauge reads a pressure of 1÷1.2 bar;
- make sure the chiller circuit has been filled according to what is described in the Audax Pro condensing unit instructions booklet;
- check the operation of the main switch located upstream of and on the hydronic module.
- ensure activation of all adjustment devices;
- check the production of domestic hot water;
- check sealing efficiency of water circuits;

Even if just one single safety check provides a negative result, do not commission the system.

3.1 HYDRONIC MODULE HYDRAULIC DIAGRAM

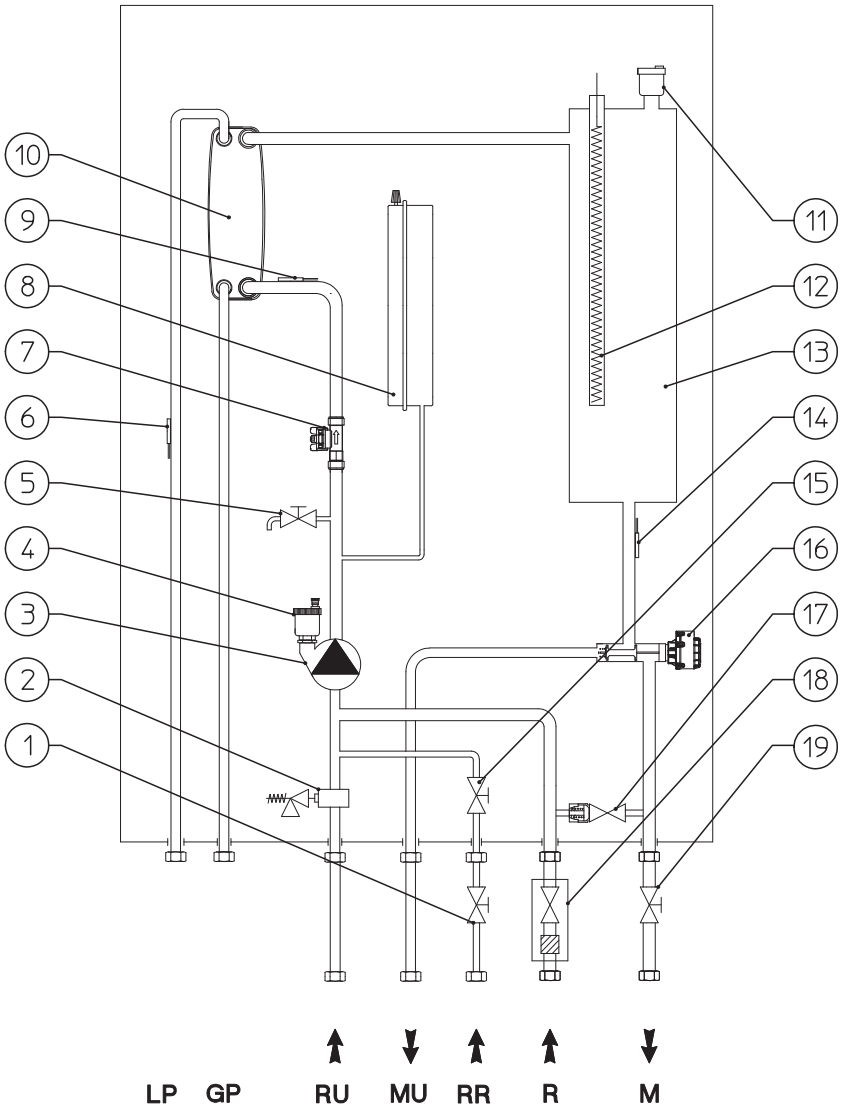

Key:
- *1 - System cut-off tap*
- *2 - 3 bar safety valve*
- *3 - Hydronic unit circulator*
- *4 - Vent valve*
- *5 - System draining valve*
- *6 - Liquid phase detection probe*
- *7 - System flow meter*
- *8 - System expansion vessel*
- *9 - Return probe*
- *10 - Plate heat exchanger*
- *11 - Vent valve*
- *12 - Central heating integrated electric resistance (optional)*
- *13 - Central heating manifold*
- *14 - Flow probe*
- *15 - System filling cock*
- *16 - Three-way valve (motorised)*
- *17 - By-pass*
- *18 - System with inspectable filter cut-off fitting*
- *19 - System cut-off tap*

- *LP - Chiller line - liquid phase*
- *GP - Chiller line - gaseous phase*
- *RU - Storage tank unit return*
- *MU - Storage tank unit flow*
- *RR - System filling*
- *R - System return*
- *M - System flow*

3-1

3.2 WIRING DIAGRAM.

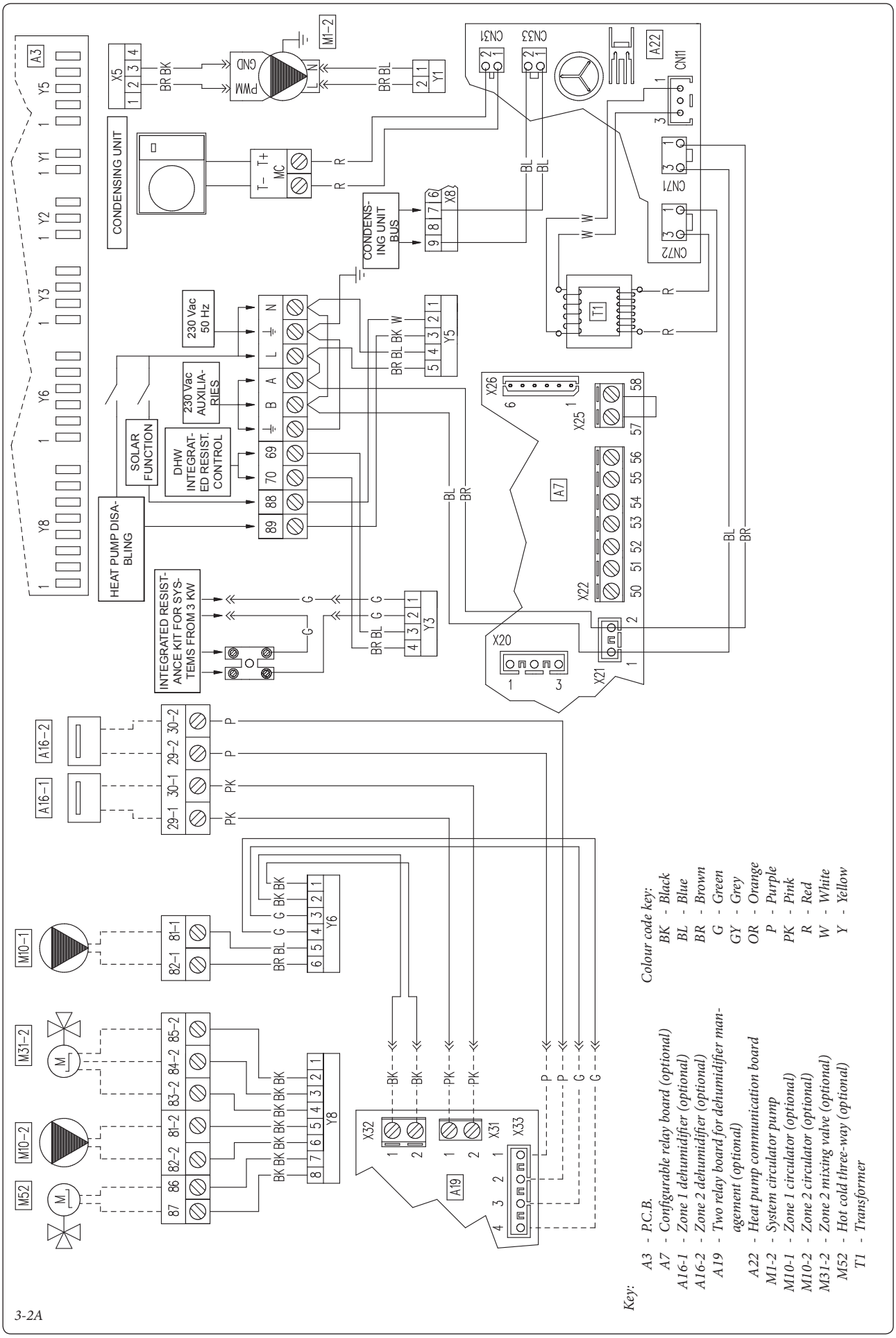

3-2A

INSTALLER

USER

MAINTENANCE TECHNICIAN

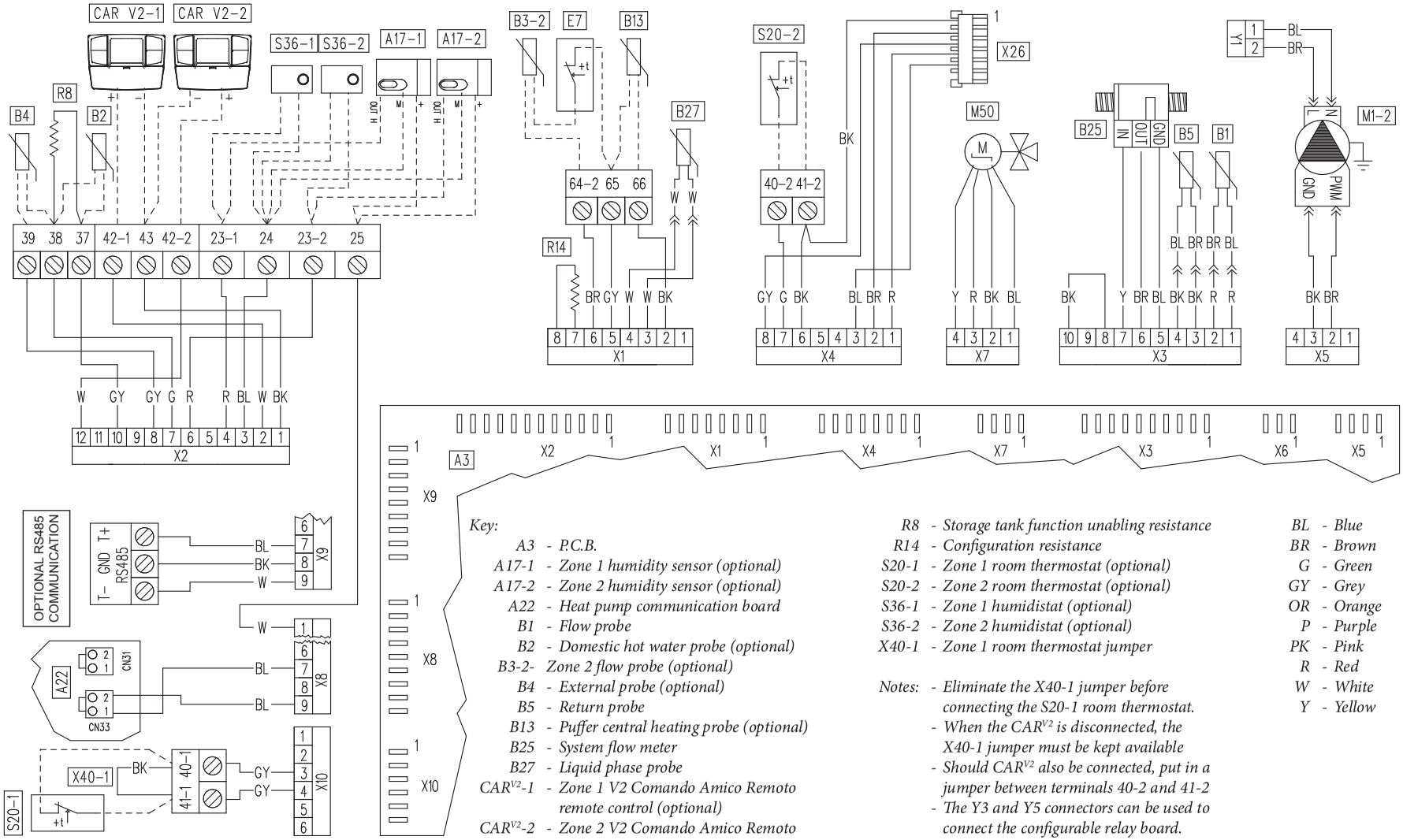

Key:

- *A3 - P.C.B.*
- *A17-1 - Zone 1 humidity sensor (optional)*
- *A17-2 - Zone 2 humidity sensor (optional)*
- *A22 - Heat pump communication board*
- *B1 - Flow probe*
- *B2 - Domestic hot water probe (optional)*
- *B3-2- Zone 2 flow probe (optional)*
- *B4 - External probe (optional)*
- *B5 - Return probe*
- *B13 - Puffer central heating probe (optional)*
- *B25 - System flow meter*
- *B27 - Liquid phase probe*
- *CAR^{V2}-1 - Zone 1 V2 Comando Amico Remoto remote control (optional)*
- *CAR^{V2}-2 - Zone 2 V2 Comando Amico Remoto remote control (optional)*
- *E7 - Low temperature safety thermostat (optional)*
- *M1-2 - System circulator pump*
- *M50 - Priority 3-way valve*
- *R8 - Storage tank function unabling resistance*
- *R14 - Configuration resistance*
- *S20-1 - Zone 1 room thermostat (optional)*
- *S20-2 - Zone 2 room thermostat (optional)*
- *S36-1 - Zone 1 humidistat (optional)*
- *S36-2 - Zone 2 humidistat (optional)*
- *X40-1 - Zone 1 room thermostat jumper*

Notes:

- *Eliminate the X40-1 jumper before connecting the S20-1 room thermostat.*
- *When the CAR^{V2} is disconnected, the X40-1 jumper must be kept available*
- *Should CAR^{V2} also be connected, put in a jumper between terminals 40-2 and 41-2*
- *The Y3 and Y5 connectors can be used to connect the configurable relay board.*
- *The Y6 connector is used to connect the 2 relay board.*
- *T+ / T- (RS485): bus for communication with other Immergas appliances.*

Colour code key:

- *BK - Black*
- *BL - Blue*
- *BR - Brown*
- *G - Green*
- *GY - Grey*
- *OR - Orange*
- *P - Purple*
- *PK - Pink*
- *R - Red*
- *W - White*
- *Y - Yellow*

3.3 SYSTEM FILTER.

The hydronic module has a filter on the system return fitting to keep the system in good operating conditions.
Periodically and when necessary, the filter can be cleaned as described below (Fig. 3-4).
Close the tap (4) and the tap (3) with a 12mm spanner, drain the water contents in the hydronic module using the drain tap (4).
Open the cap (1) and clean the filter (2).

3.4 TROUBLESHOOTING.

N.B.: maintenance interventions must be carried out by an authorised company (e.g. Immergas After-Sales Technical Assistance Service).

- Noise due to air in the system. Check opening of the special air vent valve cap (Part. 7 and 12 Fig. 1-11). Make sure the system pressure and expansion vessel pre-charge values are within the set limits; The factory-set pressure values of the expansion vessel must be 1.0 bar, the value of system pressure must be between 1 and 1.2 bar.

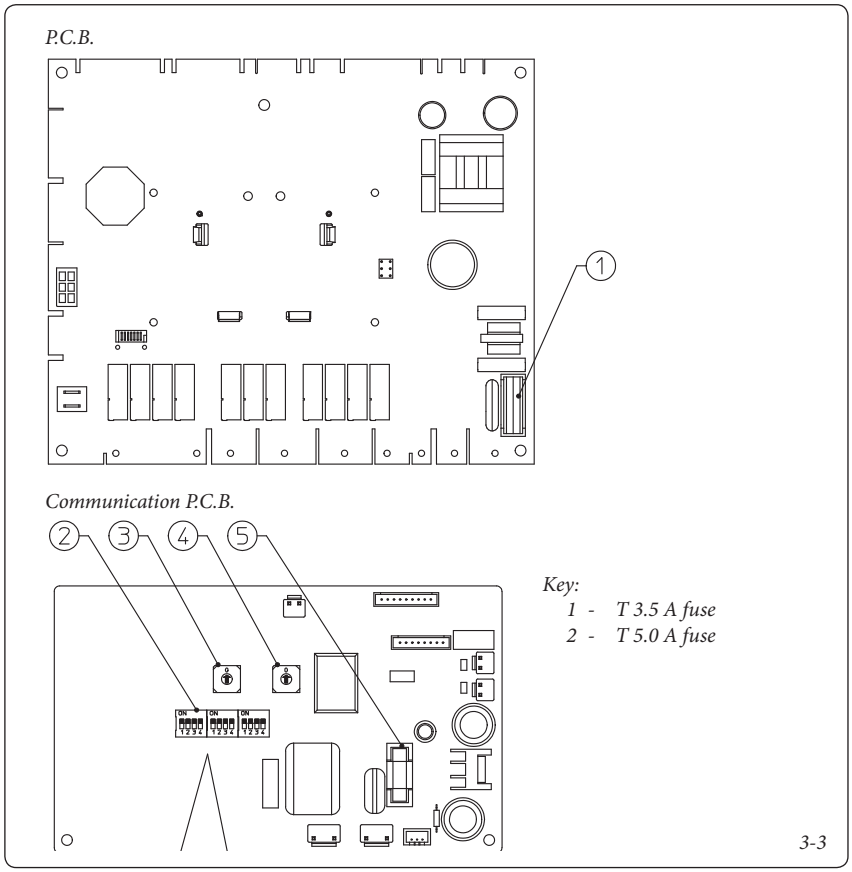

3-3

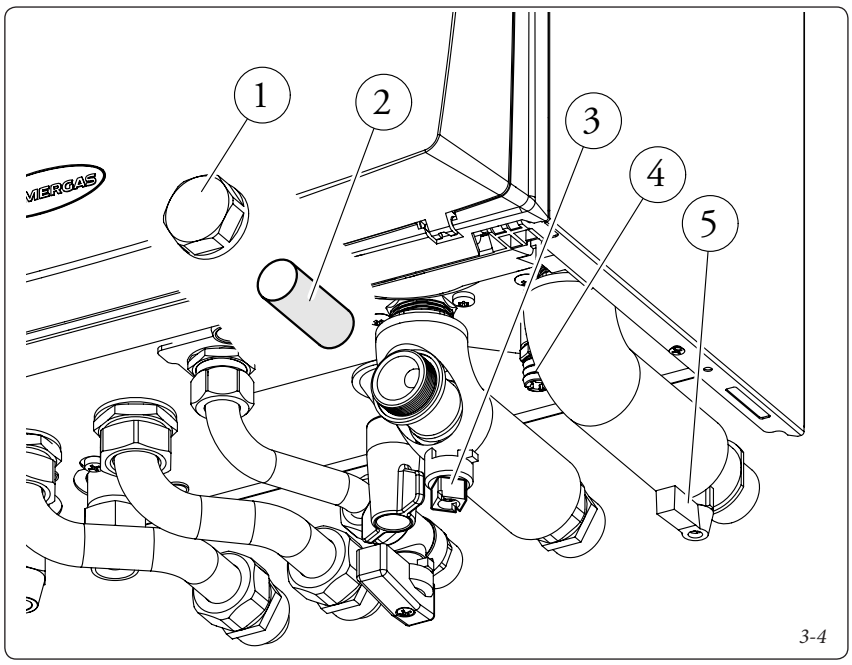

3-4

3.5 PROGRAMMING THE P.C.B.

The water heater is set up for possible programming of several operation parameters. By modifying these parameters as described below, the system can be adapted according to specific needs.

To access the programming phase, press the "MENU" button (2) until the "Password" menu appears. Enter the password, modify the numerical values using the "DHW regulation" buttons (5) and confirm with the "OK" button (1).

Once you have accessed programming, you can scroll through the parameters in the "System" menu.

Using the "DHW regulation" button, select the parameter and edit the value.

To save the parameter change, press the "OK" button.

Wait for 1 minute or press the "ESC" button (3) to exit programming mode.

Id Parameter	Parameter	Description	Range	Default	Customised value
A 03	Minimum speed	Defines the minimum operating speed of the system circulator	0 ÷ 99 %	100	
A 04	Maximum fixed speed	Defines the maximum operating speed of the system circulator	0 ÷ 99 %	100	
A 11	Condensing unit model	Establishes the condensing unit model paired with the hydronic module. If set to OFF, only the integrated generators are activated.	OFF - 5 - 8 - 10	8	
A 12	System vent	Enables the automatic vent function. This function activates as soon as the unit is powered.	OFF - ON	ON	
A 13	Number of zones	Defines the number of zones in the heating system	1 - 2	1	
A 16	Zone 1 humidity sensor	Humidity temperature sensor / Humidistat Defines the type of control on zone 1 humidity	SE = Humidity temp. sensor ST = Humidistat	ST	
A 17	Zone 2 humidity sensor	Humidity temperature sensor / Humidistat Defines the type of control on zone 2 humidity	SE = Humidity temp. sensor ST = Humidistat	ST	
A 21	BMS communication address	Defines the communication protocol between the hydronic module and the condensing unit	1 ÷ 247	11	
A 22	BMS communication setting	OFF = BMS communication protocol on 485; use if connected to optional Immergas devices. 485 = Do not use UC = Do not use	OFF - 485 - UC	OFF	

Id Parameter	Parameter	Description	Range	Default	Customised value
P 03	Relay 1 (optional)	The hydronic module is set up to operate with a configurable relay board (optional) **0** = Off **1** = DHW recirculation **2** =General alarm **3** = Central heating / cooling phase active **4** = Puffer mode active	0 ÷ 4	0	
P 04	Relay 2 (optional)	The hydronic module is set up to operate with a configurable relay board (optional) **0** = Off **1** = DHW recirculation **2** =General alarm **3** = Central heating / cooling mode active **4** = Puffer mode active	0 ÷ 4	0	
P 05	Relay 3 (optional)	The hydronic module is set up to operate with a configurable relay board (optional) **0** = Off **1** = DHW recirculation **2** =General alarm **3** = Central heating / cooling mode active **4** = Puffer mode active	0 ÷ 4	0	
P 06	Pump functioning	The pump can function in two ways. IN (intermittent): in "winter" mode, the circulator is managed by the room thermostat or by the remote control CO (continuous): in "winter" and "cooling" mode, the circulator is always powered and is, therefore, always in operation	IN - CO	IN	
P07	External probe correction	If the reading of the external probe is not correct it is possible to correct it in order to compensate any environmental factors. (Over the value of +9 the display shows "CE", which enables an external control function of the boiler for coupling of the same with a system supervisor)	-9 ÷ 9 K	0	

Id Parameter	Parameter	Description	Range	Default	Customised value
T 02	DHW thermostat	Establishes the unit ignition and switch-off mode in DHW mode. It is enabled when the water in the storage tank goes below the DHW set value and is disabled when the temperature exceeds the DHW set value.	0 ÷ 20 °C	4	
T 05	Central heating ignitions timer	The hydronic module has an electronic timer, which prevents the generator from igniting too often in central heating mode	0 - 10 minutes	3	
T 07	Delay request from TA	The system is set to switch on immediately after a request for room heating/air conditioning. For special systems (e.g. zone systems with motorised valves, etc.), it may be necessary to delay ignition.	0 - 240 seconds (step 10 sec)	0	
T 08	Display lighting	Establishes the display lighting mode. **AU:** the display lights up during use and lowers after 15 seconds of inactivity. In the event of an anomaly, the display flashes. **OFF:** the display lighting is always off. **ON:** the display lighting is always on.	AU - OFF - ON	AU	
T 09	Display	Establishes what the indicator displays 14 (Fig. 2-1). "Summer" mode: ON: circulator active, displays the flow temperature pump off the indicator is off OFF: the indicator is always off "Winter" and "cooling" mode: ON: circulator active, displays the flow temperature circulator off, displays the value set on the central heating selector. OFF: always displays the value set on the central heating selector	ON - OFF	ON	

Heat regulation menu.

Id Parameter	Parameter	Description	Range	Default	Customised value
R 01	External probe	Defines if and which external probe is used to manage the system. OFF = no external probe used OU = external probe on the condensing unit IU = optional external probe connected to the hydronic module	OFF - OU - IU	OU	
R 02	Outdoor temperature for max CH flow	Establishes the outdoor temperature at which to have the maximum flow temperature.	-15 ÷ 25 °C	-5	
R 03	Outdoor temperature for min CH flow	Establishes the outdoor temperature at which to have the minimum flow temperature.	-15 ÷ 25 °C	25	
R 04	Maximum central heating	Defines the maximum flow temperature in room central heating mode	35 ÷ 55	45	
R 05	Minimum central heating	Defines the minimum flow temperature in room central heating mode	25 ÷ 55	25	
R 06	Outdoor temperature for low temperature zone max CH flow	Establishes the outdoor temperature at which to have the maximum flow temperature in the low temperature zone	-15 ÷ 25 °C	-5	
R 07	Outdoor temperature for low temperature zone min CH flow	Establishes the outdoor temperature at which to have the minimum flow temperature in the low temperature zone	-15 ÷ 25 °C	25	
R 08	Low temperature zone maximum central heating	Defines the maximum flow temperature in room central heating mode in the low temperature zone	35 ÷ 55	35	
R 09	Low temperature zone minimum central heating	Defines the minimum flow temperature in room central heating mode in the low temperature zone	25 ÷ 35	25	
R 10	Outdoor temperature for minimum cooling flow	Establishes the maximum outdoor temperature at which to have the minimum flow temperature in cooling mode	20 ÷ 40	35	
R 11	Outdoor temperature for maximum cooling flow	Establishes the minimum outdoor temperature at which to have the maximum flow temperature in cooling mode	20 ÷ 40	25	
R 12	Minimum cooling	Defines the minimum flow temperature in room cooling mode	07 ÷ 20	7	
R 13	Maximum cooling	Defines the maximum flow temperature in room cooling mode	10 ÷ 25	12	
R 14	Outdoor temperature for low temperature zone minimum cooling flow	Establishes the outdoor temperature at which to have the minimum flow temperature in the low temperature zone	20 ÷ 40	35	
R 15	Outdoor temperature for low temperature zone max cooling flow	Establishes the outdoor temperature at which to have the maximum flow temperature in the low temperature zone	20 ÷ 40	25	
R 16	Low temperature zone minimum cooling	Defines the minimum flow temperature in room cooling mode in the low temperature zone	07 ÷ 20	18	
R 17	Low temperature zone maximum cooling	Defines the maximum flow temperature in room cooling mode in the low temperature zone	10 ÷ 25	20	

Integration menu.

Id Parameter	Parameter	Description	Range	Default	Customised value
I 01	DHW integration enabling	Allows you to enable an alternative power source (AL) to integrate domestic hot water heating.	OFF - AL	OFF	
I 02	System integration enabling	Using this function, you can enable an alternative (AL) or simultaneous (CO) power source to integrate heating system central heating.	OFF - AL - CO	OFF	
I 03	DHW max wait time	Establishes the maximum amount of time before activating DHW integration.	0 - 900 minutes (10 minute intervals)	30	
I 04	Central heating max wait time	Establishes the maximum amount of time before activating central heating integration.	0 - 900 minutes (10 minute intervals)	45	
I 08	Activation temperature	Establishes the outdoor temperature under which central heating integration is enabled.	-15 ÷ 20 °C	-5	

Maintenance menu.
Accessing this menu, the unit goes into stand-by. By selecting every single parameter, you can activate a specific function for each load.

Id Parameter	Parameter	Description	Range	Default	Customised value
M 01	Venting	In the case of new central heating systems and in particular mode for floor systems, it is very important that dearation is performed correctly. The function consists of the cyclic activation of the pump (100 s ON, 20 s OFF) and the 3-way valve (120 s D.H.W., 120 s heating system). The function lasts for 18 hours and can be interrupted by pressing the "ESC" button and setting the function to "OFF" Activation of the function is signalled by the countdown shown on the indicator (14).	OFF - ON	OFF	
M 02	System circulator speed	Establishes the system circulator speed	0 - 100%	0	
M 03	DHW 3-way	Moves the 3-way motor from system to DHW	OFF - ON	OFF	
M 04	Cooling 3-way	Moves the cooling circuit 3-way motor	OFF - ON	OFF	
M 08	Zone 1 outdoor circulator	Enables the zone 1 outdoor circulator	OFF - ON	OFF	
M 09	Zone 2 outdoor circulator	Enables the zone 2 outdoor circulator	OFF - ON	OFF	
M 10	Mixer zone 2	Establishes zone 2 mixing valve positioning	OFF - OPEN - CLOSE	OFF	
M 11	DHW electrical resistance	Enables the DHW integrated electrical resistance	OFF - ON	OFF	
M 12	Central heating electrical resistance	Enables the room central heating integrated electrical resistance	OFF - ON	OFF	
M 13	Dehumidifier zone 1	Enables the dehumidifier in zone 1	OFF - ON	OFF	
M 14	Dehumidifier zone 2	Enables the dehumidifier in zone 2	OFF - ON	OFF	
M 15	Relay 1	Enables relay 1 on the 3-relay board	OFF - ON	OFF	
M 16	Relay 2	Enables relay 2 on the 3-relay board	OFF - ON	OFF	
M 17	Relay 3	Enables relay 3 on the 3-relay board	OFF - ON	OFF	

3.6 PUMP ANTI-LOCK FUNCTION

The hydronic module has a function that starts up the pump at least once every 24 hours for 30 seconds in order to reduce the risk of the pump locking up due to prolonged inactivity.

3.7 3-WAY ANTI-LOCK FUNCTION

Both in "DHW" and in "DHW-system central heating" mode, the hydronic module has a function that activates the motorised 3-way unit 24 hours after the last time it operated by running a complete cycle in order to reduce the risk of the 3-way locking up due to prolonged inactivity.

3.8 RADIATOR ANTIFREEZE FUNCTION.

If the system return water is below 4°C, the hydronic module starts up until it reaches 42°C.

3.9 SOLAR FUNCTION.

If the solar inlet is active, any accumulated DHW is heated to 50°C.

3.10 OUTDOOR UNIT DISABLE FUNCTION.

With the inlet active, outdoor unit operation is inhibited.

3.11 DIVERTER VALVE MANAGEMENT (SUMMER / WINTER).

The unit electronics has a 230V outlet to manage the summer / winter diverter valves. The switch occurs when the mode (summer / winter) is changed from the control panel or from the CAR^{V2}.

3.12 ANTI-LEGIONALLA FUNCTION.

With the integrated DHW resistance, the function can be activated using the CAR^{V2}.
See the instructions booklet to configure the function.

3.13 AUTOMATIC VENT FUNCTION.

In the case of new central heating systems and in particular mode for floor systems, it is very important that dearation is performed correctly. The function consists of the cyclic activation of the pump (100 s ON, 20 s OFF) and the 3-way valve (120 s D.H.W., 120 s C.H.).
The function is activated in two different ways:

- each time the hydronic module is re-powered;
- by pressing the buttons at the same time (3 and 5 Fig. 2-1) for 5 seconds with the hydronic module in stand-by.

  N.B.: if the hydronic module is connected to the CAR^{V2}, the "stand-by" function can only be enabled from the remote control panel.

In the first case, the function has a duration of 8 minutes and it can be interrupted by pressing the “reset” button (2). In the second case, it has a duration of 18 hours and it can be interrupted simply by switching the hydronic module on.

Activation of the function is signalled by the countdown shown on the indicator (14).

3.14 YEARLY APPLIANCE CHECK AND MAINTENANCE.

The following checks and maintenance should be performed at least once a year.

- Visually check for water leaks or oxidation from/on connections.
- After discharging system pressure and bringing it to zero (read on the hydronic module pressure gauge), make sure the expansion vessel pressure is at 1.0 bar.
- Check that the system static pressure (with system cold and after refilling the system by means of the filling cock) is between 1 and 1.2 bar.
- Visually check that the safety and control devices have not been tampered with and/or short-circuited.
- Check the condition and integrity of the electrical system and in particular:
  - supply voltage cables must be inside the fairleads;
  - there must be no traces of blackening or burning.
- Check ignition and operation.
- Check the operation of the appliance control and adjustment devices and in particular:
  - system regulation probes intervention;

IMPORTANT NOTE: in addition to yearly maintenance, you must also check the heating system and energy efficiency, with the frequency and procedures that comply with the technical regulations in force.

3.15 CASING REMOVAL.

To facilitate hydronic module maintenance, the casing can be completely removed as follows:

- **Lower grid (Fig. 3-5a).**

1) Loosen the two screws (a);
2) Press the hooks inwards, which block the lower grid (b).
3) remove the grid (b).

- **Front panel (Fig. 3-5b).**

4) Open the protection door (e1) pulling it towards you.
5) Remove the cover caps (c) and loosen screws (d).
6) Pull the front panel (e) towards you and release it from its lower seat.

- **Front (Fig. 3-5c).**

7) Loosen the two screws (g).
8) Pull the front (f) slightly towards you.
9) Release front (f) from pins (h) pulling it towards you while pushing it upwards at the same time.

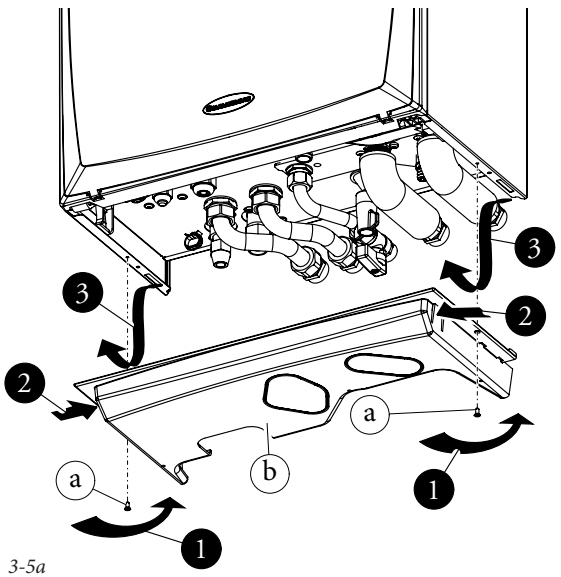

3-5a

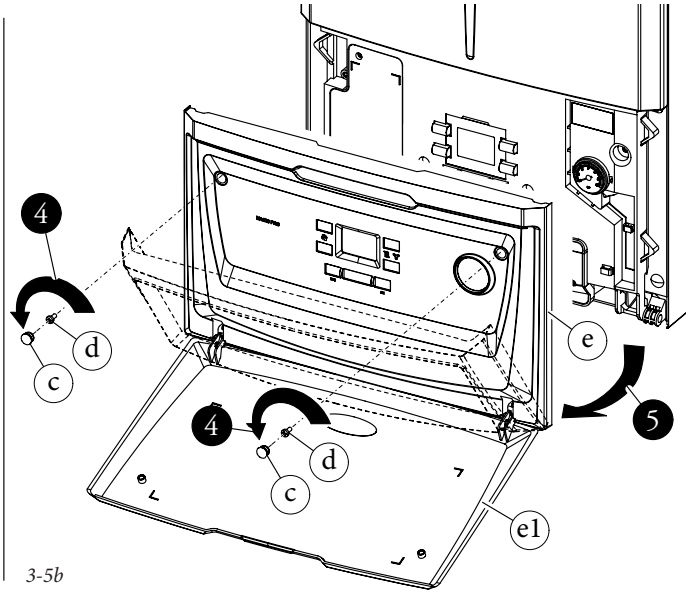

3-5b

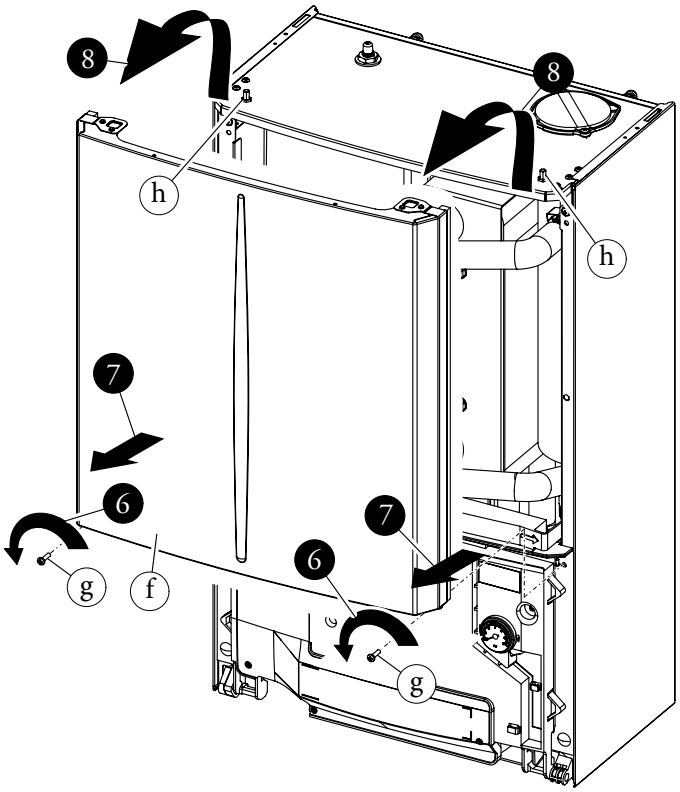

3-5c

- **Control panel (Fig. 3-5d).**

9) Press the hooks on the side of the control panel (i).

10) Tilt the control panel (i) towards you.

The control panel (i) can rotate until the support cord (j) is completely extended.

11) If the left side needs to be removed, unhook the support cord (j) from the control panel and proceed as follows.

- **Sides (Fig. 3-5e).**

12) Unscrew the side (k) fastening screws (l).

13) Remove the sides by extracting them from their rear seat (Rif. X).

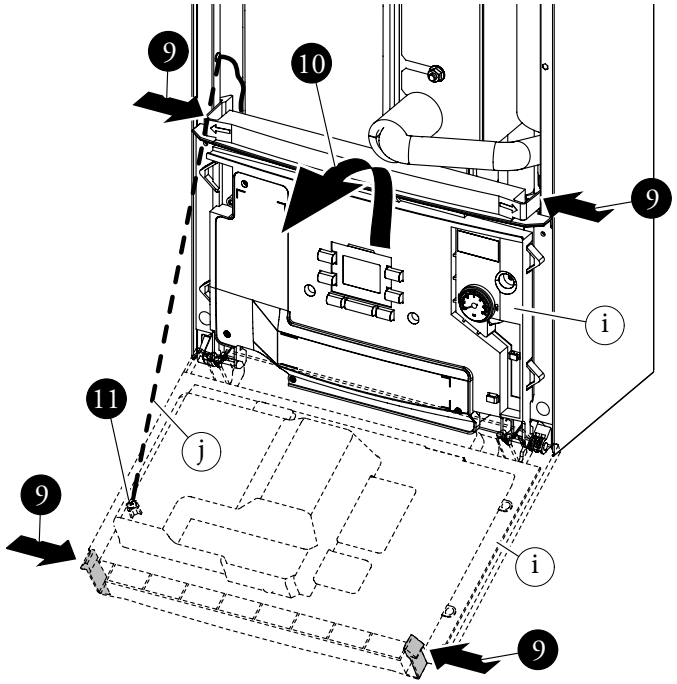

3-5d

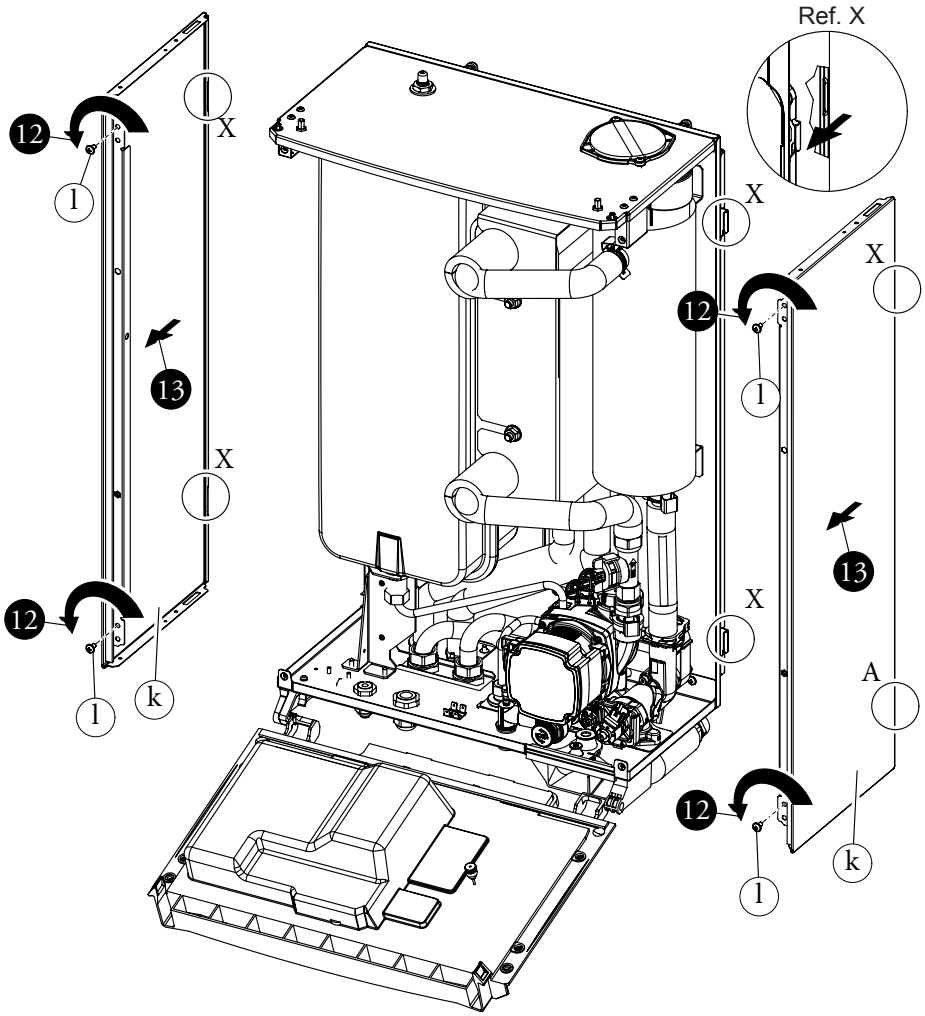

3-5e

3.16 TECHNICAL DATA.

The data below refer to the pairing between hydronic module and Audax Pro.

		Magis Pro 5 ErP	Magis Pro 8 ErP	Magis Pro 10 ErP
Nominal data for low temperature applications *				
Nominal central heating output	kW	5.80	7.71	9.80
Absorption	kW	1.28	1.89	2.39
COP	kW/kW	4.53	4.08	4.10
Nominal cooling output	kW	6.03	7.58	7.58
Absorption	kW	1.67	2.01	2.01
EER	kW/kW	3.61	3.77	3.77
Nominal output for average temperature applications **				
Nominal central heating output	kW	5.30	7.26	9.27
Absorption	kW	1.55	2.32	2.98
COP	kW/kW	3.42	3.13	3.11
Nominal cooling output	kW	4.90	5.38	7.31
Absorption	kW	1.87	2.26	3.07
EER	kW/kW	2.62	2.38	2.38
Nominal output for high temperature applications **				
Nominal central heating output	kW	4.80	6.17	8.45
Absorption	kW	1.82	2.64	3.59
COP	kW/kW	2.64	2.34	2.35

* Central heating mode status: heat exchanger water inlet/remains at 30 °C/35 °C, outdoor air temperature 7 °C db/6 °C wb. Performance in compliance with EN 14511.
Cooling mode status: heat exchanger water inlet/remains at 23 °C/18 °C, outdoor air temperature 35 °C. Performance in compliance with EN 14511.

** Central heating mode status: heat exchanger water inlet/remains at 40 °C/45 °C, outdoor air temperature 7 °C db/6 °C wb.
Cooling mode status: heat exchanger water inlet/remains at 12 °C/7 °C, outdoor air temperature 35 °C. Performance in compliance with EN 14511.

*** Central heating mode status: inlet/remains at 47 °C/55 °C, outdoor air temperature 7 °C db/6 °C wb. Performance in compliance with EN 14511.

Hydronic module data.

Hydraulic circuit max. operating pressure	bar	3
Maximum central heating temperature	°C	70
Adjustable central heating temperature (max operating field)	°C	25 - 55
Head available with 1000 l/h flow rate	kPa (m c.a.)	44.2 (4.5)
Domestic hot water adjustable temperature	°C	30 - 65
Water content	l	4.0
Expansion vessel volume	l	12.0
Expansion vessel factory-set pressure	bar	1.0
Hydraulic circuit maximum pressure	kPa	300
Electrical connection	V/Hz	230 / 50
Absorption without additional loads	W	65
Maximum absorption with loads	W	170
Integrated resistance absorption (optional)	kW	3
EEI value	-	≤ 0.20 - Part. 3
Equipment electrical system protection	-	IPX4D
Empty hydronic unit weight	kg	33.5
Full hydronic unit weight	kg	37.5

3.17 PRODUCT FICHE (IN COMPLIANCE WITH REGULATION 811/2013).

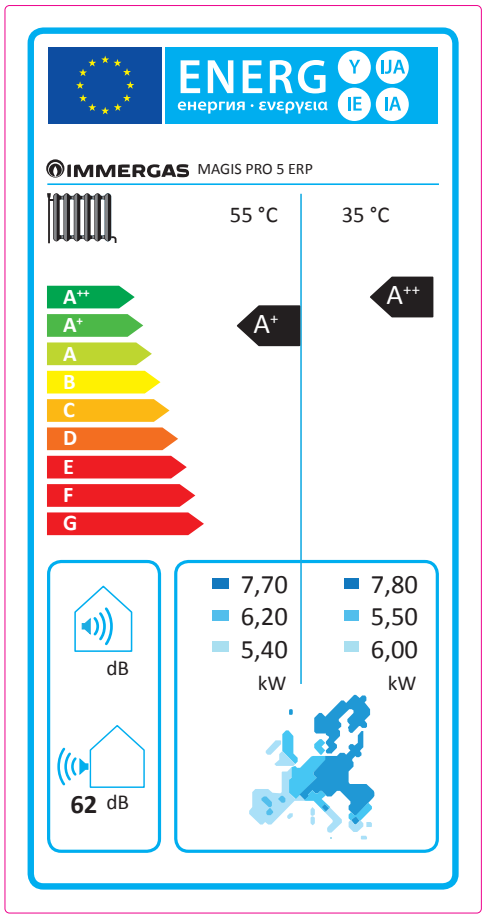

Low temperature (30/35)

Parameter	Value	Colder zones	Average zones	Hotter zones
Annual energy consumption for the central heating function (Q_{HE})	kWh/year	5870	2891	1559
Room central heating seasonal efficiency (η_s)	ηs %	162	154	201
Nominal heat output	kW	7.80	5.50	6.00

Average temperature (47/55)

Parameter	Value	Colder zones	Average zones	Hotter zones
Annual energy consumption for the central heating function (Q_{HE})	kWh/year	8100	4435	2119
Room central heating seasonal efficiency (η_s)	ηs %	91	112	132
Nominal heat output	kW	7.70	6.20	5.40

For proper installation of the appliance refer to chapter 1 of this booklet (for the installer) and current installation regulations. For proper maintenance refer to chapter 3 of this booklet (for the maintenance technician) and adhere to the frequencies and methods set out herein.

Low temperature table (30/35) colder zones

Model: **Magis Pro 5 ErP**								
Air/water heat pump: yes								
Water/water heat pump: no								
Brine/water heat pump: no								
Low temperature heat pump: yes								
With additional central heating device: no								
Mixed central heating device with heat pump: no								
The parameters are declared for average temperature application, except for low temperature heat pumps. The parameters for low temperature heat pumps are declared for low temperature application								
The parameters are declared for colder climatic conditions.								
Element	**Symbol**	**Value**	**Unit**		**Element**	**Symbol**	**Value**	**Unit**
Nominal heat output	*Nominal output*	7.80	kW		**Room central heating seasonal energy efficiency**	η_s	162	%
Central heating capacity declared with a partial load and indoor temperature equivalent to 20°C and outdoor temperature Tj					Performance coefficient declared with indoor temperature equivalent to 20°C and outdoor temperature TJ			
T_j = –7°C	*Pdh*	5.2	kW		T_j = –7°C	*COPd*	2.83	-
T_j = +2°C	*Pdh*	4.8	kW		T_j = +2°C	*COPd*	4.13	-
T_j = +7°C	*Pdh*	6.3	kW		T_j = +7°C	*COPd*	6.07	-
T_j = 12 °C	*Pdh*	6.6	kW		T_j = 12 °C	*COPd*	5.86	-
T_j = bivalent temperature	*Pdh*	4.8	kW		T_j = bivalent temperature	*COPd*	2.76	-
T_j = temperature operating limit	*Pdh*	4.2	kW		T_j = temperature operating limit	*COPd*	2.03	-
for air/water heat pumps: Tj = –15°C (if TOL < –20°C)	*Pdh*		kW		for air/water heat pumps: Tj = –15°C (if TOL < –20°C)	*COPd*		-
Bivalent temperature	T_{biv}	-8	°C		for air/water heat pumps: temperature operating limit	*TOL*	-20	°C
Central heating capacity cycle intervals	*Pcych*		kW		Cycle intervals efficiency	*COPcyc or PERcyc*		-
Degradation coefficient	*Cdh*	1.0	—		Water heating temperature operating limit	*WTOL*	40	°C
Different mode of energy consumption from the active mode					Additional heating appliance			
OFF mode	P_{OFF}	0.000	kW		Nominal heat output	*Psup*	7.80	kW
Thermostat mode off	P_{TO}	0.015	kW		Type of energy supply voltage	electrical		
Standby mode	P_{SB}	0.015	kW					
Guard heating mode	P_{CK}	0.015	kW					
Other items								
Capacity control	Variable				For air/water heat pumps: nominal air output to outside	—		m^3/h
Indoor/outdoor sound level	L_{WA}	N/A	dB		For water or brine/water heat pumps: nominal flow of brine or water, outdoor heat exchanger	—		m^3/h
Annual energy consumption	Q_{HE}	5870	kWh or GJ					
For mixed central heating appliances with a heat pump								
Stated load profile					**Water central heating energy efficiency**	η_{wh}		%
Daily electrical power consumption	Q_{elec}		kWh		Daily fuel consumption	Q_{fuel}		kWh
annual energy consumption	*AEC*		kWh		Annual fuel consumption	*AFC*		GJ
Contact information	Immergas s.p.a via Cisa Ligure n.95							

Low temperature table (30/35) average zones

Model: **Magis Pro 5 ErP**								
Air/water heat pump: yes								
Water/water heat pump: no								
Brine/water heat pump: no								
Low temperature heat pump: yes								
With additional central heating device: no								
Mixed central heating device with heat pump: no								
The parameters are declared for average temperature application, except for low temperature heat pumps. The parameters for low temperature heat pumps are declared for low temperature application								
The parameters are declared for average climatic conditions.								
Element	**Symbol**	**Value**	**Unit**		**Element**	**Symbol**	**Value**	**Unit**
Nominal heat output	*Nominal output*	5.50	kW		**Room central heating seasonal energy efficiency**	η_s	154	%
Central heating capacity declared with a partial load and indoor temperature equivalent to 20°C and outdoor temperature Tj					Performance coefficient declared with indoor temperature equivalent to 20°C and outdoor temperature TJ			
T_j = –7°C	*Pdh*	5.1	kW		T_j = –7°C	*COPd*	2.55	–
T_j = +2°C	*Pdh*	4.7	kW		T_j = +2°C	*COPd*	3.77	–
T_j = +7°C	*Pdh*	6.2	kW		T_j = +7°C	*COPd*	5.64	–
T_j = 12 °C	*Pdh*	6.6	kW		T_j = 12 °C	*COPd*	5.86	–
T_j = bivalent temperature	*Pdh*	4.9	kW		T_j = bivalent temperature	*COPd*	2.54	–
T_j = temperature operating limit	*Pdh*	5.5	kW		T_j = temperature operating limit	*COPd*	2.36	–
for air/water heat pumps: Tj = –15°C (if TOL < –20°C)	*Pdh*		kW		for air/water heat pumps: Tj = –15°C (if TOL < –20°C)	*COPd*		–
Bivalent temperature	T_{biv}	-7	°C		for air/water heat pumps: temperature operating limit	*TOL*	-10	°C
Central heating capacity cycle intervals	*Pcych*		kW		Cycle intervals efficiency	*COPcyc or PERcyc*		–
Degradation coefficient	*Cdh*	1.0	–		Water heating temperature operating limit	*WTOL*	40	°C
Different mode of energy consumption from the active mode					Additional heating appliance			
OFF mode	P_{OFF}	0.000	kW		Nominal heat output	*Psup*	0.62	kW
Thermostat mode off	P_{TO}	0.015	kW		Type of energy supply voltage	electrical		
Standby mode	P_{SB}	0.015	kW					
Guard heating mode	P_{CK}	0.015	kW					
Other items								
Capacity control	Variable				For air/water heat pumps: nominal air output to outside	—		m^3/h
Indoor/outdoor sound level	L_{WA}	62	dB		For water or brine/water heat pumps: nominal flow of brine or water, outdoor heat exchanger	—		m^3/h
Annual energy consumption	Q_{HE}	2891	kWh or GJ					
For mixed central heating appliances with a heat pump								
Stated load profile					**Water central heating energy efficiency**	η_{wh}		%
Daily electrical power consumption	Q_{elec}		kWh		Daily fuel consumption	Q_{fuel}		kWh
annual energy consumption	*AEC*		kWh		Annual fuel consumption	*AFC*		GJ
Contact information	Immergas s.p.a via Cisa Ligure n.95							

Low temperature table (30/35) hotter zones

Model: **Magis Pro 5 ErP**								
Air/water heat pump: yes								
Water/water heat pump: no								
Brine/water heat pump: no								
Low temperature heat pump: yes								
With additional central heating device: no								
Mixed central heating device with heat pump: no								
The parameters are declared for average temperature application, except for low temperature heat pumps. The parameters for low temperature heat pumps are declared for low temperature application								
The parameters are declared for hotter climatic conditions.								
Element	**Symbol**	**Value**	**Unit**		**Element**	**Symbol**	**Value**	**Unit**
Nominal heat output	*Nominal output*	6.00	kW		**Room central heating seasonal energy efficiency**	η_s	201	%
Central heating capacity declared with a partial load and indoor temperature equivalent to 20°C and outdoor temperature Tj					Performance coefficient declared with indoor temperature equivalent to 20°C and outdoor temperature TJ			
T_j = –7°C	*Pdh*	-	kW		T_j = –7°C	*COPd*	-	–
T_j = +2°C	*Pdh*	4.6	kW		T_j = +2°C	*COPd*	3.31	–
T_j = +7°C	*Pdh*	6.0	kW		T_j = +7°C	*COPd*	5.06	–
T_j = 12 °C	*Pdh*	6.6	kW		T_j = 12 °C	*COPd*	5.89	–
T_j = bivalent temperature	*Pdh*	5.7	kW		T_j = bivalent temperature	*COPd*	3.67	–
T_j = temperature operating limit	*Pdh*	4.6	kW		T_j = temperature operating limit	*COPd*	3.31	–
for air/water heat pumps: Tj = –15°C (if TOL < –20°C)	*Pdh*		kW		for air/water heat pumps: Tj = –15°C (if TOL < –20°C)	*COPd*		–
Bivalent temperature	T_{biv}	4	°C		for air/water heat pumps: temperature operating limit	*TOL*	2	°C
Central heating capacity cycle intervals	*Pcych*		kW		Cycle intervals efficiency	*COPcyc or PERcyc*		–
Degradation coefficient	*Cdh*	1.0	—		Water heating temperature operating limit	*WTOL*	55	°C
Different mode of energy consumption from the active mode					Additional heating appliance			
OFF mode	P_{OFF}	0.015	kW		Nominal heat output	*Psup*	1.40	kW
Thermostat mode off	P_{TO}	0.015	kW		Type of energy supply voltage	electrical		
Standby mode	P_{SB}	0.015	kW					
Guard heating mode	P_{CK}	0.015	kW					
Other items								
Capacity control	Variable				For air/water heat pumps: nominal air output to outside	—		m^3/h
Indoor/outdoor sound level	L_{WA}	N/A	dB		For water or brine/water heat pumps: nominal flow of brine or water, outdoor heat exchanger	—		m^3/h
Annual energy consumption	Q_{HE}	1559	kWh or GJ					
For mixed central heating appliances with a heat pump								
Stated load profile					**Water central heating energy efficiency**	η_{wh}		%
Daily electrical power consumption	Q_{elec}		kWh		Daily fuel consumption	Q_{fuel}		kWh
annual energy consumption	*AEC*		kWh		Annual fuel consumption	*AFC*		GJ
Contact information	Immergas s.p.a via Cisa Ligure n.95							

Average temperature table (47/55) colder zones

Model: **Magis Pro 5 ErP**								
Air/water heat pump: yes								
Water/water heat pump: no								
Brine/water heat pump: no								
Low temperature heat pump: no								
With additional central heating device: no								
Mixed central heating device with heat pump: no								
The parameters are declared for average temperature application, except for low temperature heat pumps. The parameters for low temperature heat pumps are declared for low temperature application								
The parameters are declared for colder climatic conditions								
Element	**Symbol**	**Value**	**Unit**		**Element**	**Symbol**	**Value**	**Unit**
Nominal heat output	*Nominal output*	7.70	kW		**Room central heating seasonal energy efficiency**	η_s	91	%
Central heating capacity declared with a partial load and indoor temperature equivalent to 20°C and outdoor temperature Tj					Performance coefficient declared with indoor temperature equivalent to 20°C and outdoor temperature TJ			
T_j = –7°C	*Pdh*	4.9	kW		T_j = –7°C	*COPd*	2.03	–
T_j = +2°C	*Pdh*	4.6	kW		T_j = +2°C	*COPd*	3.13	–
T_j = +7°C	*Pdh*	6.0	kW		T_j = +7°C	*COPd*	4.62	–
T_j = 12 °C	*Pdh*	6.5	kW		T_j = 12 °C	*COPd*	5.33	–
T_j = bivalent temperature	*Pdh*	4.7	kW		T_j = bivalent temperature	*COPd*	2.03	–
T_j = temperature operating limit	*Pdh*	4.6	kW		T_j = temperature operating limit	*COPd*	1.73	–
for air/water heat pumps: Tj = –15°C (if TOL < –20°C)	*Pdh*		kW		for air/water heat pumps: Tj = –15°C (if TOL < –20°C)	*COPd*		–
Bivalent temperature	T_{biv}	-7	°C		for air/water heat pumps: temperature operating limit	*TOL*	-10	°C
Central heating capacity cycle intervals	*Pcych*		kW		Cycle intervals efficiency	*COPcyc or PERcyc*		–
Degradation coefficient	*Cdh*	1.0	—		Water heating temperature operating limit	*WTOL*	55	°C
Different mode of energy consumption from the active mode					Additional heating appliance			
OFF mode	P_{OFF}	0.000	kW		Nominal heat output	*Psup*	7.70	kW
Thermostat mode off	P_{TO}	0.015	kW		Type of energy supply voltage	electrical		
Standby mode	P_{SB}	0.015	kW					
Guard heating mode	P_{CK}	0.015	kW					
Other items								
Capacity control	Variable				For air/water heat pumps: nominal air output to outside	—		m^3/h
Indoor/outdoor sound level	L_{WA}	N/A	dB		For water or brine/water heat pumps: nominal flow of brine or water, outdoor heat exchanger	—		m^3/h
Annual energy consumption	Q_{HE}	8100	kWh or GJ					
For mixed central heating appliances with a heat pump								
Stated load profile					**Water central heating energy efficiency**	η_{wh}		%
Daily electrical power consumption	Q_{elec}		kWh		Daily fuel consumption	Q_{fuel}		kWh
annual energy consumption	*AEC*		kWh		Annual fuel consumption	*AFC*		GJ
Contact information	Immergas s.p.a via Cisa Ligure n.95							

Average temperature table (47/55) average zones

Model: **Magis Pro 5 ErP**								
Air/water heat pump: yes								
Water/water heat pump: no								
Brine/water heat pump: no								
Low temperature heat pump: no								
With additional central heating device: no								
Mixed central heating device with heat pump: no								
The parameters are declared for average temperature application, except for low temperature heat pumps. The parameters for low temperature heat pumps are declared for low temperature application								
The parameters are declared for average climatic conditions								
Element	**Symbol**	**Value**	**Unit**		**Element**	**Symbol**	**Value**	**Unit**
Nominal heat output	*Nominal output*	6.20	kW		**Room central heating seasonal energy efficiency**	η_s	112	%
Central heating capacity declared with a partial load and indoor temperature equivalent to 20°C and outdoor temperature Tj					Performance coefficient declared with indoor temperature equivalent to 20°C and outdoor temperature TJ			
T_j = –7°C	*Pdh*	4.8	kW		T_j = –7°C	*COPd*	1.73	–
T_j = +2°C	*Pdh*	4.5	kW		T_j = +2°C	*COPd*	2.76	–
T_j = +7°C	*Pdh*	5.8	kW		T_j = +7°C	*COPd*	4.30	–
T_j = 12 °C	*Pdh*	6.4	kW		T_j = 12 °C	*COPd*	5.04	–
T_j = bivalent temperature	*Pdh*	4.6	kW		T_j = bivalent temperature	*COPd*	1.84	–
T_j = temperature operating limit	*Pdh*	4.3	kW		T_j = temperature operating limit	*COPd*	1.49	–
for air/water heat pumps: Tj = –15°C (if TOL < –20°C)	*Pdh*		kW		for air/water heat pumps: Tj = –15°C (if TOL < –20°C)	*COPd*		–
Bivalent temperature	T_{biv}	-6	°C		for air/water heat pumps: temperature operating limit	*TOL*	-10	°C
Central heating capacity cycle intervals	*Pcych*		kW		Cycle intervals efficiency	*COPcyc or PERcyc*		–
Degradation coefficient	*Cdh*	1.0	–		Water heating temperature operating limit	*WTOL*	55	°C
Different mode of energy consumption from the active mode					Additional heating appliance			
OFF mode	P_{OFF}	0.000	kW		Nominal heat output	*Psup*	1.87	kW
Thermostat mode off	P_{TO}	0.015	kW		Type of energy supply voltage	electrical		
Standby mode	P_{SB}	0.015	kW					
Guard heating mode	P_{CK}	0.015	kW					
Other items								
Capacity control	Variable				For air/water heat pumps: nominal air output to outside	—		m^3/h
Indoor/outdoor sound level	L_{WA}	N/A	dB		For water or brine/water heat pumps: nominal flow of brine or water, outdoor heat exchanger	—		m^3/h
Annual energy consumption	Q_{HE}	4435	kWh or GJ					
For mixed central heating appliances with a heat pump								
Stated load profile					**Water central heating energy efficiency**	η_{wh}		%
Daily electrical power consumption	Q_{elec}		kWh		Daily fuel consumption	Q_{fuel}		kWh
annual energy consumption	*AEC*		kWh		Annual fuel consumption	*AFC*		GJ
Contact information	Immergas s.p.a via Cisa Ligure n.95							

Average temperature table (47/55) hotter zones

Model: **Magis Pro 5 ErP**								
Air/water heat pump: yes								
Water/water heat pump: no								
Brine/water heat pump: no								
Low temperature heat pump: no								
With additional central heating device: no								
Mixed central heating device with heat pump: no								
The parameters are declared for average temperature application, except for low temperature heat pumps. The parameters for low temperature heat pumps are declared for low temperature application								
The parameters are declared for hotter climatic conditions								
Element	**Symbol**	**Value**	**Unit**		**Element**	**Symbol**	**Value**	**Unit**
Nominal heat output	*Nominal output*	5.40	kW		**Room central heating seasonal energy efficiency**	η_s	132	%
Central heating capacity declared with a partial load and indoor temperature equivalent to 20°C and outdoor temperature Tj					Performance coefficient declared with indoor temperature equivalent to 20°C and outdoor temperature TJ			
T_j = –7°C	*Pdh*	-	kW		T_j = –7°C	*COPd*	-	–
T_j = +2°C	*Pdh*	4.2	kW		T_j = +2°C	*COPd*	2.09	–
T_j = +7°C	*Pdh*	5.3	kW		T_j = +7°C	*COPd*	2.74	–
T_j = 12 °C	*Pdh*	6.2	kW		T_j = 12 °C	*COPd*	4.68	–
T_j = bivalent temperature	*Pdh*	4.6	kW		T_j = bivalent temperature	*COPd*	2.49	–
T_j = temperature operating limit	*Pdh*	4.2	kW		T_j = temperature operating limit	*COPd*	2.09	–
for air/water heat pumps: Tj = –15°C (if TOL < –20°C)	*Pdh*		kW		for air/water heat pumps: Tj = –15°C (if TOL < –20°C)	*COPd*		–
Bivalent temperature	T_{biv}	7	°C		for air/water heat pumps: temperature operating limit	*TOL*	2	°C
Central heating capacity cycle intervals	*Pcych*		kW		Cycle intervals efficiency	*COPcyc or PERcyc*		–
Degradation coefficient	*Cdh*	1.0	—		Water heating temperature operating limit	*WTOL*	55	°C
Different mode of energy consumption from the active mode					Additional heating appliance			
OFF mode	P_{OFF}	0.000	kW		Nominal heat output	*Psup*	1.20	kW
Thermostat mode off	P_{TO}	0.015	kW		Type of energy supply voltage	electrical		
Standby mode	P_{SB}	0.015	kW					
Guard heating mode	P_{CK}	0.015	kW					
Other items								
Capacity control	Variable				For air/water heat pumps: nominal air output to outside	—		m^3/h
Indoor/outdoor sound level	L_{WA}	N/A	dB		For water or brine/water heat pumps: nominal flow of brine or water, outdoor heat exchanger	—		m^3/h
Annual energy consumption	Q_{HE}	2119	kWh or GJ					
For mixed central heating appliances with a heat pump								
Stated load profile					**Water central heating energy efficiency**	η_{wh}		%
Daily electrical power consumption	Q_{elec}		kWh		Daily fuel consumption	Q_{fuel}		kWh
annual energy consumption	*AEC*		kWh		Annual fuel consumption	*AFC*		GJ
Contact information	Immergas s.p.a via Cisa Ligure n.95							

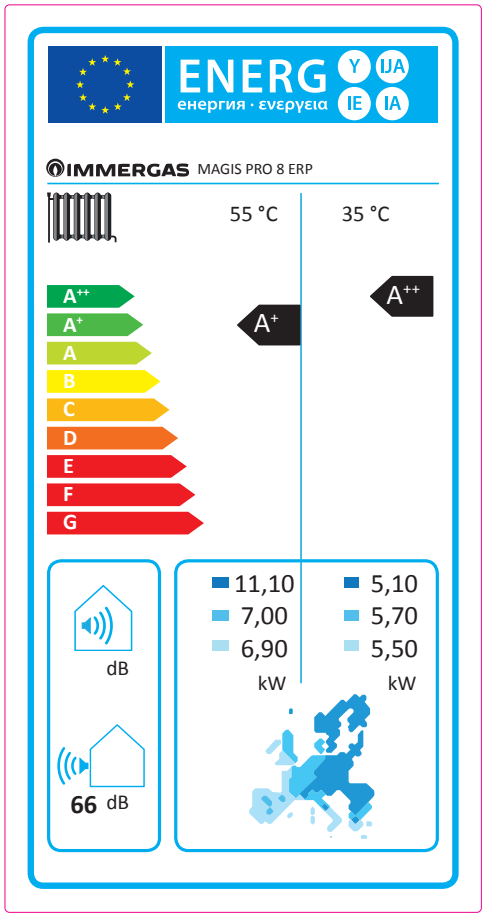

Low temperature (30/35)

Parameter	Value	Colder zones	Average zones	Hotter zones
Annual energy consumption for the central heating function (Q_{HE})	kWh/year	3901	3059	1427
Room central heating seasonal efficiency (η_s)	ηs %	125	151	201
Nominal heat output	kW	5.10	5.70	5.50

Average temperature (47/55)

Parameter	Value	Colder zones	Average zones	Hotter zones
Annual energy consumption for the central heating function (Q_{HE})	kWh/year	11475	5469	2882
Room central heating seasonal efficiency (η_s)	ηs %	92	103	114
Nominal heat output	kW	11.10	7.00	6.90

For proper installation of the appliance refer to chapter 1 of this booklet (for the installer) and current installation regulations. For proper maintenance refer to chapter 3 of this booklet (for the maintenance technician) and adhere to the frequencies and methods set out herein.

Low temperature table (30/35) colder zones

Model: **Magis Pro 8 ErP**								
Air/water heat pump: yes								
Water/water heat pump: no								
Brine/water heat pump: no								
Low temperature heat pump: yes								
With additional central heating device: no								
Mixed central heating device with heat pump: no								
The parameters are declared for average temperature application, except for low temperature heat pumps. The parameters for low temperature heat pumps are declared for low temperature application								
The parameters are declared for colder climatic conditions.								
Element	**Symbol**	**Value**	**Unit**		**Element**	**Symbol**	**Value**	**Unit**
Nominal heat output	*Nominal output*	5.10	kW		**Room central heating seasonal energy efficiency**	η_s	125	%
Central heating capacity declared with a partial load and indoor temperature equivalent to 20°C and outdoor temperature Tj					Performance coefficient declared with indoor temperature equivalent to 20°C and outdoor temperature TJ			
T_j = –7°C	*Pdh*	3.2	kW		T_j = –7°C	*COPd*	2.67	–
T_j = +2°C	*Pdh*	2.1	kW		T_j = +2°C	*COPd*	3.68	–
T_j = +7°C	*Pdh*	3.0	kW		T_j = +7°C	*COPd*	5.55	–
T_j = 12 °C	*Pdh*	3.4	kW		T_j = 12 °C	*COPd*	6.07	–
T_j = bivalent temperature	*Pdh*	5.5	kW		T_j = bivalent temperature	*COPd*	1.93	–
T_j = temperature operating limit	*Pdh*	5.5	kW		T_j = temperature operating limit	*COPd*	1.93	–
for air/water heat pumps: Tj = –15°C (if TOL < –20°C)	*Pdh*		kW		for air/water heat pumps: Tj = –15°C (if TOL < –20°C)	*COPd*		–
Bivalent temperature	T_{biv}	-20	°C		for air/water heat pumps: temperature operating limit	*TOL*	-20	°C
Central heating capacity cycle intervals	*Pcych*		kW		Cycle intervals efficiency	*COPcyc or PERcyc*		–
Degradation coefficient	*Cdh*	1.0	—		Water heating temperature operating limit	*WTOL*	55	°C
Different mode of energy consumption from the active mode					Additional heating appliance			
OFF mode	P_{OFF}	0.000	kW		Nominal heat output	*Psup*	5.10	kW
Thermostat mode off	P_{TO}	0.015	kW		Type of energy supply voltage	electrical		
Standby mode	P_{SB}	0.015	kW					
Guard heating mode	P_{CK}	0.015	kW					
Other items								
Capacity control	Variable				For air/water heat pumps: nominal air output to outside	—		m^3/h
Indoor/outdoor sound level	L_{WA}	N/A	dB		For water or brine/water heat pumps: nominal flow of brine or water, outdoor heat exchanger	—		m^3/h
Annual energy consumption	Q_{HE}	3901	kWh or GJ					
For mixed central heating appliances with a heat pump								
Stated load profile					**Water central heating energy efficiency**	η_{wh}		%
Daily electrical power consumption	Q_{elec}		kWh		Daily fuel consumption	Q_{fuel}		kWh
annual energy consumption	*AEC*		kWh		Annual fuel consumption	*AFC*		GJ
Contact information	Immergas s.p.a via Cisa Ligure n.95							

Low temperature table (30/35) average zones

Model: **Magis Pro 8 ErP**								
Air/water heat pump: yes								
Water/water heat pump: no								
Brine/water heat pump: no								
Low temperature heat pump: yes								
With additional central heating device: no								
Mixed central heating device with heat pump: no								
The parameters are declared for average temperature application, except for low temperature heat pumps. The parameters for low temperature heat pumps are declared for low temperature application								
The parameters are declared for average climatic conditions.								
Element	**Symbol**	**Value**	**Unit**		**Element**	**Symbol**	**Value**	**Unit**
Nominal heat output	*Nominal output*	5.70	kW		**Room central heating seasonal energy efficiency**	η_s	151	%
Central heating capacity declared with a partial load and indoor temperature equivalent to 20°C and outdoor temperature Tj					Performance coefficient declared with indoor temperature equivalent to 20°C and outdoor temperature TJ			
T_j = –7°C	*Pdh*	5.2	kW		T_j = –7°C	*COPd*	2.34	–
T_j = +2°C	*Pdh*	3.1	kW		T_j = +2°C	*COPd*	3.54	–
T_j = +7°C	*Pdh*	3.0	kW		T_j = +7°C	*COPd*	5.77	–
T_j = 12 °C	*Pdh*	3.4	kW		T_j = 12 °C	*COPd*	6.66	–
T_j = bivalent temperature	*Pdh*	6.0	kW		T_j = bivalent temperature	*COPd*	2.46	–
T_j = temperature operating limit	*Pdh*	5.9	kW		T_j = temperature operating limit	*COPd*	1.97	–
for air/water heat pumps: Tj = –15°C (if TOL < –20°C)	*Pdh*		kW		for air/water heat pumps: Tj = –15°C (if TOL < –20°C)	*COPd*		–
Bivalent temperature	T_{biv}	-12	°C		for air/water heat pumps: temperature operating limit	*TOL*	-10	°C
Central heating capacity cycle intervals	*Pcych*		kW		Cycle intervals efficiency	*COPcyc or PERcyc*		–
Degradation coefficient	*Cdh*	1.0	—		Water heating temperature operating limit	*WTOL*	55	°C
Different mode of energy consumption from the active mode					Additional heating appliance			
OFF mode	P_{OFF}	0.000	kW		Nominal heat output	*Psup*	0.00	kW
Thermostat mode off	P_{TO}	0.015	kW		Type of energy supply voltage	electrical		
Standby mode	P_{SB}	0.015	kW					
Guard heating mode	P_{CK}	0.015	kW					
Other items								
Capacity control	Variable				For air/water heat pumps: nominal air output to outside	—		m^3/h
Indoor/outdoor sound level	L_{WA}	66	dB		For water or brine/water heat pumps: nominal flow of brine or water, outdoor heat exchanger	—		m^3/h
Annual energy consumption	Q_{HE}	3059	kWh or GJ					
For mixed central heating appliances with a heat pump								
Stated load profile					**Water central heating energy efficiency**	η_{wh}		%
Daily electrical power consumption	Q_{elec}		kWh		Daily fuel consumption	Q_{fuel}		kWh
annual energy consumption	*AEC*		kWh		Annual fuel consumption	*AFC*		GJ
Contact information	Immergas s.p.a via Cisa Ligure n.95							

Low temperature table (30/35) hotter zones

Model: **Magis Pro 8 ErP**								
Air/water heat pump: yes								
Water/water heat pump: no								
Brine/water heat pump: no								
Low temperature heat pump: yes								
With additional central heating device: no								
Mixed central heating device with heat pump: no								
The parameters are declared for average temperature application, except for low temperature heat pumps. The parameters for low temperature heat pumps are declared for low temperature application								
The parameters are declared for hotter climatic conditions.								
Element	**Symbol**	**Value**	**Unit**		**Element**	**Symbol**	**Value**	**Unit**
Nominal heat output	*Nominal output*	5.50	kW		**Room central heating seasonal energy efficiency**	η_s	201	%
Central heating capacity declared with a partial load and indoor temperature equivalent to 20°C and outdoor temperature Tj					Performance coefficient declared with indoor temperature equivalent to 20°C and outdoor temperature TJ			
T_j = –7°C	*Pdh*	-	kW		T_j = –7°C	*COPd*	-	–
T_j = +2°C	*Pdh*	6.5	kW		T_j = +2°C	*COPd*	3.19	–
T_j = +7°C	*Pdh*	3.6	kW		T_j = +7°C	*COPd*	4.51	–
T_j = 12 °C	*Pdh*	3.3	kW		T_j = 12 °C	*COPd*	6.30	–
T_j = bivalent temperature	*Pdh*	3.6	kW		T_j = bivalent temperature	*COPd*	4.51	–
T_j = temperature operating limit	*Pdh*	6.5	kW		T_j = temperature operating limit	*COPd*	3.20	–
for air/water heat pumps: Tj = –15°C (if TOL < –20°C)	*Pdh*		kW		for air/water heat pumps: Tj = –15°C (if TOL < –20°C)	*COPd*		–
Bivalent temperature	T_{biv}	1	°C		for air/water heat pumps: temperature operating limit	*TOL*	2	°C
Central heating capacity cycle intervals	*Pcych*		kW		Cycle intervals efficiency	*COPcyc or PERcyc*		–
Degradation coefficient	*Cdh*	0.9	—		Water heating temperature operating limit	*WTOL*	55	°C
Different mode of energy consumption from the active mode					Additional heating appliance			
OFF mode	P_{OFF}	0.000	kW		Nominal heat output	*Psup*	0.00	kW
Thermostat mode off	P_{TO}	0.015	kW		Type of energy supply voltage	electrical		
Standby mode	P_{SB}	0.015	kW					
Guard heating mode	P_{CK}	0.150	kW					
Other items								
Capacity control	Variable				For air/water heat pumps: nominal air output to outside	—		m^3/h
Indoor/outdoor sound level	L_{WA}	N/A	dB		For water or brine/water heat pumps: nominal flow of brine or water, outdoor heat exchanger	—		m^3/h
Annual energy consumption	Q_{HE}	1427	kWh or GJ					
For mixed central heating appliances with a heat pump								
Stated load profile					**Water central heating energy efficiency**	η_{wh}		%
Daily electrical power consumption	Q_{elec}		kWh		Daily fuel consumption	Q_{fuel}		kWh
annual energy consumption	*AEC*		kWh		Annual fuel consumption	*AFC*		GJ
Contact information	Immergas s.p.a via Cisa Ligure n.95							

Average temperature table (47/55) colder zones

Model: **Magis Pro 8 ErP**								
Air/water heat pump: yes								
Water/water heat pump: no								
Brine/water heat pump: no								
Low temperature heat pump: no								
With additional central heating device: no								
Mixed central heating device with heat pump: no								
The parameters are declared for average temperature application, except for low temperature heat pumps. The parameters for low temperature heat pumps are declared for low temperature application								
The parameters are declared for colder climatic conditions								
Element	**Symbol**	**Value**	**Unit**		**Element**	**Symbol**	**Value**	**Unit**
Nominal heat output	*Nominal output*	11.10	kW		**Room central heating seasonal energy efficiency**	η_s	92	%
Central heating capacity declared with a partial load and indoor temperature equivalent to 20°C and outdoor temperature Tj					Performance coefficient declared with indoor temperature equivalent to 20°C and outdoor temperature TJ			
T_j = –7°C	*Pdh*	8.0	kW		T_j = –7°C	*COPd*	2.22	–
T_j = +2°C	*Pdh*	6.4	kW		T_j = +2°C	*COPd*	3.03	–
T_j = +7°C	*Pdh*	7.8	kW		T_j = +7°C	*COPd*	4.40	–
T_j = 12 °C	*Pdh*	9.5	kW		T_j = 12 °C	*COPd*	5.53	–
T_j = bivalent temperature	*Pdh*	6.7	kW		T_j = bivalent temperature	*COPd*	2.22	–
T_j = temperature operating limit	*Pdh*	6.0	kW		T_j = temperature operating limit	*COPd*	1.75	–
for air/water heat pumps: Tj = –15°C (if TOL < –20°C)	*Pdh*		kW		for air/water heat pumps: Tj = –15°C (if TOL < –20°C)	*COPd*		–
Bivalent temperature	T_{biv}	-7	°C		for air/water heat pumps: temperature operating limit	*TOL*	-10	°C
Central heating capacity cycle intervals	*Pcych*		kW		Cycle intervals efficiency	*COPcyc or PERcyc*		–
Degradation coefficient	*Cdh*	1.0	—		Water heating temperature operating limit	*WTOL*	55	°C
Different mode of energy consumption from the active mode					Additional heating appliance			
OFF mode	P_{OFF}	0.000	kW		Nominal heat output	*Psup*	11.10	kW
Thermostat mode off	P_{TO}	0.015	kW		Type of energy supply voltage	electrical		
Standby mode	P_{SB}	0.015	kW					
Guard heating mode	P_{CK}	0.015	kW					
Other items								
Capacity control	Variable				For air/water heat pumps: nominal air output to outside	—		m^3/h
Indoor/outdoor sound level	L_{WA}	N/A	dB		For water or brine/water heat pumps: nominal flow of brine or water, outdoor heat exchanger	—		m^3/h
Annual energy consumption	Q_{HE}	11475	kWh or GJ					
For mixed central heating appliances with a heat pump								
Stated load profile					**Water central heating energy efficiency**	η_{wh}		%
Daily electrical power consumption	Q_{elec}		kWh		Daily fuel consumption	Q_{fuel}		kWh
annual energy consumption	*AEC*		kWh		Annual fuel consumption	*AFC*		GJ
Contact information	Immergas s.p.a via Cisa Ligure n.95							

Average temperature table (47/55) average zones

Model: **Magis Pro 8 ErP**								
Air/water heat pump: yes								
Water/water heat pump: no								
Brine/water heat pump: no								
Low temperature heat pump: no								
With additional central heating device: no								
Mixed central heating device with heat pump: no								
The parameters are declared for average temperature application, except for low temperature heat pumps. The parameters for low temperature heat pumps are declared for low temperature application								
The parameters are declared for average climatic conditions								
Element	**Symbol**	**Value**	**Unit**		**Element**	**Symbol**	**Value**	**Unit**
Nominal heat output	*Nominal output*	7.00	kW		**Room central heating seasonal energy efficiency**	η_s	103	%
Central heating capacity declared with a partial load and indoor temperature equivalent to 20°C and outdoor temperature Tj					Performance coefficient declared with indoor temperature equivalent to 20°C and outdoor temperature TJ			
T_j = –7°C	*Pdh*	4.7	kW		T_j = –7°C	*COPd*	1.41	–
T_j = +2°C	*Pdh*	6.2	kW		T_j = +2°C	*COPd*	2.67	–
T_j = +7°C	*Pdh*	7.7	kW		T_j = +7°C	*COPd*	3.86	–
T_j = 12 °C	*Pdh*	8.9	kW		T_j = 12 °C	*COPd*	4.90	–
T_j = bivalent temperature	*Pdh*	5.3	kW		T_j = bivalent temperature	*COPd*	1.91	–
T_j = temperature operating limit	*Pdh*	4.0	kW		T_j = temperature operating limit	*COPd*	0.98	–
for air/water heat pumps: Tj = –15°C (if TOL < –20°C)	*Pdh*		kW		for air/water heat pumps: Tj = –15°C (if TOL < –20°C)	*COPd*		–
Bivalent temperature	T_{biv}	-4	°C		for air/water heat pumps: temperature operating limit	*TOL*	-10	°C
Central heating capacity cycle intervals	*Pcych*		kW		Cycle intervals efficiency	*COPcyc or PERcyc*		–
Degradation coefficient	*Cdh*	1.0	–		Water heating temperature operating limit	*WTOL*	55	°C
Different mode of energy consumption from the active mode					Additional heating appliance			
OFF mode	P_{OFF}	0.000	kW		Nominal heat output	*Psup*	3.00	kW
Thermostat mode off	P_{TO}	0.015	kW		Type of energy supply voltage	electrical		
Standby mode	P_{SB}	0.015	kW					
Guard heating mode	P_{CK}	0.015	kW					
Other items								
Capacity control	Variable				For air/water heat pumps: nominal air output to outside	—		m^3/h
Indoor/outdoor sound level	L_{WA}	N/A	dB		For water or brine/water heat pumps: nominal flow of brine or water, outdoor heat exchanger	—		m^3/h
Annual energy consumption	Q_{HE}	5469	kWh or GJ					
For mixed central heating appliances with a heat pump								
Stated load profile					**Water central heating energy efficiency**	η_{wh}		%
Daily electrical power consumption	Q_{elec}		kWh		Daily fuel consumption	Q_{fuel}		kWh
annual energy consumption	*AEC*		kWh		Annual fuel consumption	*AFC*		GJ
Contact information	Immergas s.p.a via Cisa Ligure n.95							

Average temperature table (47/55) hotter zones

Model: **Magis Pro 8 ErP**							
Air/water heat pump: yes							
Water/water heat pump: no							
Brine/water heat pump: no							
Low temperature heat pump: no							
With additional central heating device: no							
Mixed central heating device with heat pump: no							
The parameters are declared for average temperature application, except for low temperature heat pumps. The parameters for low temperature heat pumps are declared for low temperature application							
The parameters are declared for hotter climatic conditions							
Element	**Symbol**	**Value**	**Unit**		**Element**	**Symbol**	**Value**	**Unit**
Nominal heat output	*Nominal output*	6.90	kW		**Room central heating seasonal energy efficiency**	η_s	114	%
Central heating capacity declared with a partial load and indoor temperature equivalent to 20°C and outdoor temperature Tj					Performance coefficient declared with indoor temperature equivalent to 20°C and outdoor temperature TJ			
T_j = –7°C	*Pdh*	-	kW		T_j = –7°C	*COPd*	-	–
T_j = +2°C	*Pdh*	4.9	kW		T_j = +2°C	*COPd*	1.54	–
T_j = +7°C	*Pdh*	7.2	kW		T_j = +7°C	*COPd*	2.57	–
T_j = 12 °C	*Pdh*	8.7	kW		T_j = 12 °C	*COPd*	4.66	–
T_j = bivalent temperature	*Pdh*	5.8	kW		T_j = bivalent temperature	*COPd*	2.40	–
T_j = temperature operating limit	*Pdh*	4.9	kW		T_j = temperature operating limit	*COPd*	1.54	–
for air/water heat pumps: Tj = –15°C (if TOL < –20°C)	*Pdh*		kW		for air/water heat pumps: Tj = –15°C (if TOL < –20°C)	*COPd*		–
Bivalent temperature	T_{biv}	4	°C		for air/water heat pumps: temperature operating limit	*TOL*	2	°C
Central heating capacity cycle intervals	*Pcych*		kW		Cycle intervals efficiency	*COPcyc or PERcyc*		–
Degradation coefficient	*Cdh*	1.0	—		Water heating temperature operating limit	*WTOL*	55	°C
Different mode of energy consumption from the active mode					Additional heating appliance			
OFF mode	P_{OFF}	0.000	kW		Nominal heat output	*Psup*	2.00	kW
Thermostat mode off	P_{TO}	0.015	kW		Type of energy supply voltage	electrical		
Standby mode	P_{SB}	0.015	kW					
Guard heating mode	P_{CK}	0.015	kW					
Other items								
Capacity control	Variable				For air/water heat pumps: nominal air output to outside	—		m^3/h
Indoor/outdoor sound level	L_{WA}	N/A	dB		For water or brine/water heat pumps: nominal flow of brine or water, outdoor heat exchanger	—		m^3/h
Annual energy consumption	Q_{HE}	2882	kWh or GJ					
For mixed central heating appliances with a heat pump								
Stated load profile					**Water central heating energy efficiency**	η_{wh}		%
Daily electrical power consumption	Q_{elec}		kWh		Daily fuel consumption	Q_{fuel}		kWh
annual energy consumption	*AEC*		kWh		Annual fuel consumption	*AFC*		GJ
Contact information	Immergas s.p.a via Cisa Ligure n.95							

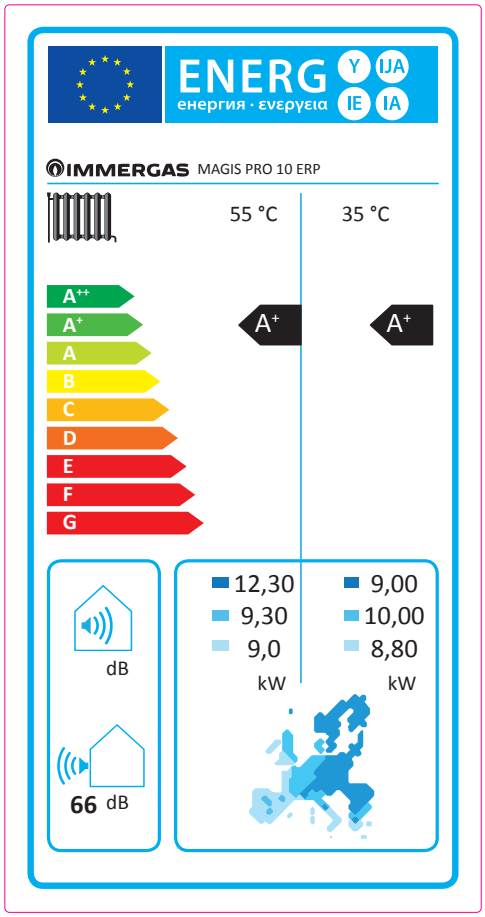

Low temperature (30/35)

Parameter	Value	Colder zones	Average zones	Hotter zones
Annual energy consumption for the heating function (Q_{HE})	kWh/year	6980	5569	2376
Room central heating seasonal efficiency (η_s)	ηs %	124	145	194
Nominal heat output	kW	9.00	10.00	8.80

Average temperature (47/55)

Parameter	Value	Colder zones	Average zones	Hotter zones
Annual energy consumption for the heating function (Q_{HE})	kWh/year	13274	7214	3765
Room central heating seasonal efficiency (η_s)	ηs %	88	104	124
Nominal heat output	kW	12.30	9.30	9.0

For proper installation of the appliance refer to chapter 1 of this booklet (for the installer) and current installation regulations. For proper maintenance refer to chapter 3 of this booklet (for the maintenance technician) and adhere to the frequencies and methods set out herein.

Low temperature table (30/35) colder zones

Model: **Magis Pro 10 ErP**								
Air/water heat pump: yes								
Water/water heat pump: no								
Brine/water heat pump: no								
Low temperature heat pump: yes								
With additional central heating device: no								
Mixed central heating device with heat pump: no								
The parameters are declared for average temperature application, except for low temperature heat pumps. The parameters for low temperature heat pumps are declared for low temperature application								
The parameters are declared for colder climatic conditions.								
Element	**Symbol**	**Value**	**Unit**		**Element**	**Symbol**	**Value**	**Unit**
Nominal heat output	*Nominal output*	9.00	kW		**Room central heating seasonal energy efficiency**	η_s	124	%
Central heating capacity declared with a partial load and indoor temperature equivalent to 20°C and outdoor temperature Tj					Performance coefficient declared with indoor temperature equivalent to 20°C and outdoor temperature TJ			
T_j = –7°C	*Pdh*	8.9	kW		T_j = –7°C	*COPd*	2.67	–
T_j = +2°C	*Pdh*	8.3	kW		T_j = +2°C	*COPd*	3.72	–
T_j = +7°C	*Pdh*	10.3	kW		T_j = +7°C	*COPd*	5.68	–
T_j = 12 °C	*Pdh*	12.4	kW		T_j = 12 °C	*COPd*	6.07	–
T_j = bivalent temperature	*Pdh*	6.9	kW		T_j = bivalent temperature	*COPd*	2.25	–
T_j = temperature operating limit	*Pdh*	6.6	kW		T_j = temperature operating limit	*COPd*	1.93	–
for air/water heat pumps: Tj = –15°C (if TOL < –20°C)	*Pdh*		kW		for air/water heat pumps: Tj = –15°C (if TOL < –20°C)	*COPd*		–
Bivalent temperature	T_{biv}	-15	°C		for air/water heat pumps: temperature operating limit	*TOL*	-20	°C
Central heating capacity cycle intervals	*Pcych*		kW		Cycle intervals efficiency	*COPcyc or PERcyc*		–
Degradation coefficient	*Cdh*	1.0	—		Water heating temperature operating limit	*WTOL*	55	°C
Different mode of energy consumption from the active mode					Additional heating appliance			
OFF mode	P_{OFF}	0.000	kW		Nominal heat output	*Psup*	13.10	kW
Thermostat mode off	P_{TO}	0.015	kW		Type of energy supply voltage	electrical		
Standby mode	P_{SB}	0.015	kW					
Guard heating mode	P_{CK}	0.015	kW					
Other items								
Capacity control	Variable				For air/water heat pumps: nominal air output to outside	—		m^3/h
Indoor/outdoor sound level	L_{WA}	N/A	dB		For water or brine/water heat pumps: nominal flow of brine or water, outdoor heat exchanger	—		m^3/h
Annual energy consumption	Q_{HE}	6980	kWh or GJ					
For mixed central heating appliances with a heat pump								
Stated load profile					**Water central heating energy efficiency**	η_{wh}		%
Daily electrical power consumption	Q_{elec}		kWh		Daily fuel consumption	Q_{fuel}		kWh
annual energy consumption	*AEC*		kWh		Annual fuel consumption	*AFC*		GJ
Contact information	Immergas s.p.a via Cisa Ligure n.95							

Low temperature table (30/35) average zones

Model: **Magis Pro 10 ErP**								
Air/water heat pump: yes								
Water/water heat pump: no								
Brine/water heat pump: no								
Low temperature heat pump: yes								
With additional central heating device: no								
Mixed central heating device with heat pump: no								
The parameters are declared for average temperature application, except for low temperature heat pumps. The parameters for low temperature heat pumps are declared for low temperature application								
The parameters are declared for average climatic conditions.								
Element	**Symbol**	**Value**	**Unit**		**Element**	**Symbol**	**Value**	**Unit**
Nominal heat output	*Nominal output*	10.00	kW		**Room central heating seasonal energy efficiency**	η_s	145	%
Central heating capacity declared with a partial load and indoor temperature equivalent to 20°C and outdoor temperature Tj					Performance coefficient declared with indoor temperature equivalent to 20°C and outdoor temperature TJ			
T_j = –7°C	*Pdh*	8.7	kW		T_j = –7°C	*COPd*	2.53	–
T_j = +2°C	*Pdh*	8.3	kW		T_j = +2°C	*COPd*	3.53	–
T_j = +7°C	*Pdh*	10.2	kW		T_j = +7°C	*COPd*	5.27	–
T_j = 12 °C	*Pdh*	12.4	kW		T_j = 12 °C	*COPd*	5.85	–
T_j = bivalent temperature	*Pdh*	8.4	kW		T_j = bivalent temperature	*COPd*	2.53	–
T_j = temperature operating limit	*Pdh*	8.1	kW		T_j = temperature operating limit	*COPd*	2.59	–
for air/water heat pumps: Tj = –15°C (if TOL < –20°C)	*Pdh*		kW		for air/water heat pumps: Tj = –15°C (if TOL < –20°C)	*COPd*		–
Bivalent temperature	T_{biv}	-6	°C		for air/water heat pumps: temperature operating limit	*TOL*	-10	°C
Central heating capacity cycle intervals	*Pcych*		kW		Cycle intervals efficiency	*COPcyc or PERcyc*		–
Degradation coefficient	*Cdh*	1.0	—		Water heating temperature operating limit	*WTOL*	55	°C
Different mode of energy consumption from the active mode					Additional heating appliance			
OFF mode	P_{OFF}	0.000	kW		Nominal heat output	*Psup*	1.90	kW
Thermostat mode off	P_{TO}	0.015	kW		Type of energy supply voltage	electrical		
Standby mode	P_{SB}	0.015	kW					
Guard heating mode	P_{CK}	0.015	kW					
Other items								
Capacity control	Variable				For air/water heat pumps: nominal air output to outside	—		m^3/h
Indoor/outdoor sound level	L_{WA}	66	dB		For water or brine/water heat pumps: nominal flow of brine or water, outdoor heat exchanger	—		m^3/h
Annual energy consumption	Q_{HE}	5569	kWh or GJ					
For mixed central heating appliances with a heat pump								
Stated load profile					**Water central heating energy efficiency**	η_{wh}		%
Daily electrical power consumption	Q_{elec}		kWh		Daily fuel consumption	Q_{fuel}		kWh
annual energy consumption	*AEC*		kWh		Annual fuel consumption	*AFC*		GJ
Contact information	Immergas s.p.a via Cisa Ligure n.95							

Low temperature table (30/35) hotter zones

Model: **Magis Pro 10 ErP**								
Air/water heat pump: yes								
Water/water heat pump: no								
Brine/water heat pump: no								
Low temperature heat pump: yes								
With additional central heating device: no								
Mixed central heating device with heat pump: no								
The parameters are declared for average temperature application, except for low temperature heat pumps. The parameters for low temperature heat pumps are declared for low temperature application								
The parameters are declared for hotter climatic conditions.								
Element	**Symbol**	**Value**	**Unit**		**Element**	**Symbol**	**Value**	**Unit**
Nominal heat output	*Nominal output*	8.80	kW		**Room central heating seasonal energy efficiency**	η_s	194	%
Central heating capacity declared with a partial load and indoor temperature equivalent to 20°C and outdoor temperature Tj					Performance coefficient declared with indoor temperature equivalent to 20°C and outdoor temperature TJ			
T_j = –7°C	*Pdh*	-	kW		T_j = –7°C	*COPd*	-	–
T_j = +2°C	*Pdh*	8.4	kW		T_j = +2°C	*COPd*	3.01	–
T_j = +7°C	*Pdh*	10.0	kW		T_j = +7°C	*COPd*	4.73	–
T_j = 12 °C	*Pdh*	12.3	kW		T_j = 12 °C	*COPd*	5.85	–
T_j = bivalent temperature	*Pdh*	10.6	kW		T_j = bivalent temperature	*COPd*	4.08	–
T_j = temperature operating limit	*Pdh*	8.4	kW		T_j = temperature operating limit	*COPd*	3.01	–
for air/water heat pumps: Tj = –15°C (if TOL < –20°C)	*Pdh*		kW		for air/water heat pumps: Tj = –15°C (if TOL < –20°C)	*COPd*		–
Bivalent temperature	T_{biv}	7	°C		for air/water heat pumps: temperature operating limit	*TOL*	2	°C
Central heating capacity cycle intervals	*Pcych*		kW		Cycle intervals efficiency	*COPcyc or PERcyc*		–
Degradation coefficient	*Cdh*	1.0	—		Water heating temperature operating limit	*WTOL*	55	°C
Different mode of energy consumption from the active mode					Additional heating appliance			
OFF mode	P_{OFF}	0.000	kW		Nominal heat output	*Psup*	0.42	kW
Thermostat mode off	P_{TO}	0.015	kW		Type of energy supply voltage	electrical		
Standby mode	P_{SB}	0.015	kW					
Guard heating mode	P_{CK}	0.015	kW					
Other items								
Capacity control	Variable				For air/water heat pumps: nominal air output to outside	—		m^3/h
Indoor/outdoor sound level	L_{WA}	N/A	dB		For water or brine/water heat pumps: nominal flow of brine or water, outdoor heat exchanger	—		m^3/h
Annual energy consumption	Q_{HE}	2376	kWh or GJ					
For mixed central heating appliances with a heat pump								
Stated load profile					**Water central heating energy efficiency**	η_{wh}		%
Daily electrical power consumption	Q_{elec}		kWh		Daily fuel consumption	Q_{fuel}		kWh
annual energy consumption	*AEC*		kWh		Annual fuel consumption	*AFC*		GJ
Contact information	Immergas s.p.a via Cisa Ligure n.95							

Average temperature table (47/55) colder zones

Model: **Magis Pro 10 ErP**								
Air/water heat pump: yes								
Water/water heat pump: no								
Brine/water heat pump: no								
Low temperature heat pump: no								
With additional central heating device: no								
Mixed central heating device with heat pump: no								
The parameters are declared for average temperature application, except for low temperature heat pumps. The parameters for low temperature heat pumps are declared for low temperature application								
The parameters are declared for colder climatic conditions								
Element	**Symbol**	**Value**	**Unit**		**Element**	**Symbol**	**Value**	**Unit**
Nominal heat output	*Nominal output*	12.30	kW		**Room central heating seasonal energy efficiency**	η_s	88	%
Central heating capacity declared with a partial load and indoor temperature equivalent to 20°C and outdoor temperature Tj					Performance coefficient declared with indoor temperature equivalent to 20°C and outdoor temperature TJ			
T_j = –7°C	*Pdh*	8.1	kW		T_j = –7°C	*COPd*	2.05	–
T_j = +2°C	*Pdh*	8.4	kW		T_j = +2°C	*COPd*	2.97	–
T_j = +7°C	*Pdh*	10.0	kW		T_j = +7°C	*COPd*	4.36	–
T_j = 12 °C	*Pdh*	12.0	kW		T_j = 12 °C	*COPd*	5.54	–
T_j = bivalent temperature	*Pdh*	8.1	kW		T_j = bivalent temperature	*COPd*	2.05	–
T_j = temperature operating limit	*Pdh*	6.9	kW		T_j = temperature operating limit	*COPd*	1.75	–
for air/water heat pumps: Tj = –15°C (if TOL < –20°C)	*Pdh*		kW		for air/water heat pumps: Tj = –15°C (if TOL < –20°C)	*COPd*		–
Bivalent temperature	T_{biv}	-7	°C		for air/water heat pumps: temperature operating limit	*TOL*	-10	°C
Central heating capacity cycle intervals	*Pcych*		kW		Cycle intervals efficiency	*COPcyc or PERcyc*		–
Degradation coefficient	*Cdh*	1.0	—		Water heating temperature operating limit	*WTOL*	55	°C
Different mode of energy consumption from the active mode					Additional heating appliance			
OFF mode	P_{OFF}	0.000	kW		Nominal heat output	*Psup*	12.30	kW
Thermostat mode off	P_{TO}	0.015	kW		Type of energy supply voltage	electrical		
Standby mode	P_{SB}	0.015	kW					
Guard heating mode	P_{CK}	0.015	kW					
Other items								
Capacity control	Variable				For air/water heat pumps: nominal air output to outside	—		m^3/h
Indoor/outdoor sound level	L_{WA}	N/A	dB		For water or brine/water heat pumps: nominal flow of brine or water, outdoor heat exchanger	—		m^3/h
Annual energy consumption	Q_{HE}	13274	kWh or GJ					
For mixed central heating appliances with a heat pump								
Stated load profile					**Water central heating energy efficiency**	η_{wh}		%
Daily electrical power consumption	Q_{elec}		kWh		Daily fuel consumption	Q_{fuel}		kWh
annual energy consumption	*AEC*		kWh		Annual fuel consumption	*AFC*		GJ
Contact information	Immergas s.p.a via Cisa Ligure n.95							

Average temperature table (47/55) average zones

Model: **Magis Pro 10 ErP**								
Air/water heat pump: yes								
Water/water heat pump: no								
Brine/water heat pump: no								
Low temperature heat pump: no								
With additional central heating device: no								
Mixed central heating device with heat pump: no								
The parameters are declared for average temperature application, except for low temperature heat pumps. The parameters for low temperature heat pumps are declared for low temperature application								
The parameters are declared for average climatic conditions								
Element	**Symbol**	**Value**	**Unit**		**Element**	**Symbol**	**Value**	**Unit**
Nominal heat output	*Nominal output*	9.30	kW		**Room central heating seasonal energy efficiency**	η_s	104	%
Central heating capacity declared with a partial load and indoor temperature equivalent to 20°C and outdoor temperature Tj					Performance coefficient declared with indoor temperature equivalent to 20°C and outdoor temperature TJ			
T_j = –7°C	*Pdh*	5.9	kW		T_j = –7°C	*COPd*	1.51	–
T_j = +2°C	*Pdh*	8.4	kW		T_j = +2°C	*COPd*	2.61	–
T_j = +7°C	*Pdh*	9.8	kW		T_j = +7°C	*COPd*	3.88	–
T_j = 12 °C	*Pdh*	11.8	kW		T_j = 12 °C	*COPd*	5.03	–
T_j = bivalent temperature	*Pdh*	6.8	kW		T_j = bivalent temperature	*COPd*	2.37	–
T_j = temperature operating limit	*Pdh*	4.5	kW		T_j = temperature operating limit	*COPd*	0.98	–
for air/water heat pumps: Tj = –15°C (if TOL < –20°C)	*Pdh*		kW		for air/water heat pumps: Tj = –15°C (if TOL < –20°C)	*COPd*		–
Bivalent temperature	T_{biv}	-3	°C		for air/water heat pumps: temperature operating limit	*TOL*	-10	°C
Central heating capacity cycle intervals	*Pcych*		kW		Cycle intervals efficiency	*COPcyc or PERcyc*		–
Degradation coefficient	*Cdh*	1.0	–		Water heating temperature operating limit	*WTOL*	55	°C
Different mode of energy consumption from the active mode					Additional heating appliance			
OFF mode	P_{OFF}	0.000	kW		Nominal heat output	*Psup*	4.80	kW
Thermostat mode off	P_{TO}	0.015	kW		Type of energy supply voltage	electrical		
Standby mode	P_{SB}	0.015	kW					
Guard heating mode	P_{CK}	0.015	kW					
Other items								
Capacity control	Variable				For air/water heat pumps: nominal air output to outside	—		m^3/h
Indoor/outdoor sound level	L_{WA}	N/A	dB		For water or brine/water heat pumps: nominal flow of brine or water, outdoor heat exchanger	—		m^3/h
Annual energy consumption	Q_{HE}	7214	kWh or GJ					
For mixed central heating appliances with a heat pump								
Stated load profile					**Water central heating energy efficiency**	η_{wh}		%
Daily electrical power consumption	Q_{elec}		kWh		Daily fuel consumption	Q_{fuel}		kWh
annual energy consumption	*AEC*		kWh		Annual fuel consumption	*AFC*		GJ
Contact information	Immergas s.p.a via Cisa Ligure n.95							

Average temperature table (47/55) hotter zones

Model: **Magis Pro 10 ErP**								
Air/water heat pump: yes								
Water/water heat pump: no								
Brine/water heat pump: no								
Low temperature heat pump: no								
With additional central heating device: no								
Mixed central heating device with heat pump: no								
The parameters are declared for average temperature application, except for low temperature heat pumps. The parameters for low temperature heat pumps are declared for low temperature application								
The parameters are declared for hotter climatic conditions								
Element	**Symbol**	**Value**	**Unit**		**Element**	**Symbol**	**Value**	**Unit**
Nominal heat output	*Nominal output*	9.0	kW		**Room central heating seasonal energy efficiency**	η_s	124	%
Central heating capacity declared with a partial load and indoor temperature equivalent to 20°C and outdoor temperature Tj					Performance coefficient declared with indoor temperature equivalent to 20°C and outdoor temperature TJ			
T_j = –7°C	*Pdh*	-	kW		T_j = –7°C	*COPd*	-	–
T_j = +2°C	*Pdh*	6.6	kW		T_j = +2°C	*COPd*	1.54	–
T_j = +7°C	*Pdh*	9.2	kW		T_j = +7°C	*COPd*	2.79	–
T_j = 12 °C	*Pdh*	11.3	kW		T_j = 12 °C	*COPd*	4.26	–
T_j = bivalent temperature	*Pdh*	7.6	kW		T_j = bivalent temperature	*COPd*	2.55	–
T_j = temperature operating limit	*Pdh*	6.6	kW		T_j = temperature operating limit	*COPd*	1.54	–
for air/water heat pumps: Tj = –15°C (if TOL < –20°C)	*Pdh*		kW		for air/water heat pumps: Tj = –15°C (if TOL < –20°C)	*COPd*		–
Bivalent temperature	T_{biv}	4	°C		for air/water heat pumps: temperature operating limit	*TOL*	2	°C
Central heating capacity cycle intervals	*Pcych*		kW		Cycle intervals efficiency	*COPcyc or PERcyc*		–
Degradation coefficient	*Cdh*	1.0	–		Water heating temperature operating limit	*WTOL*	55	°C
Different mode of energy consumption from the active mode					Additional heating appliance			
OFF mode	P_{OFF}	0.000	kW		Nominal heat output	*Psup*	2.44	kW
Thermostat mode off	P_{TO}	0.015	kW		Type of energy supply voltage	electrical		
Standby mode	P_{SB}	0.015	kW					
Guard heating mode	P_{CK}	0.015	kW					
Other items								
Capacity control	Variable				For air/water heat pumps: nominal air output to outside	—		m^3/h
Indoor/outdoor sound level	L_{WA}	N/A	dB		For water or brine/water heat pumps: nominal flow of brine or water, outdoor heat exchanger	—		m^3/h
Annual energy consumption	Q_{HE}	3765	kWh or GJ					
For mixed central heating appliances with a heat pump								
Stated load profile					**Water central heating energy efficiency**	η_{wh}		%
Daily electrical power consumption	Q_{elec}		kWh		Daily fuel consumption	Q_{fuel}		kWh
annual energy consumption	*AEC*		kWh		Annual fuel consumption	*AFC*		GJ
Contact information	Immergas s.p.a via Cisa Ligure n.95							

3.18 PARAMETERS FOR FILLING IN THE PACKAGE FICHE.

Should you wish to install an assembly starting from the Magis Pro ErP package, use the package fiche shown in Fig. 3-11.
To fill it in correctly, enter the figures shown in tables Fig. 3-9 and 3-10 (as shown in the package fiche facsimile Fig. 3-8).
The remaining values must be obtained from the technical data sheets of the products used to make up the assembly (e.g. solar devices, integration boiler, temperature controllers).
Use sheet fig. 3-11 for "assemblies" related to the central heating function (e.g.: heat pump + temperature controller).
N.B.: since the product is standard supplied with a temperature controller, the package fiche must always be completed.

Facsimile for filling in the package fiche for preferential boiler space heaters.

Room central heating seasonal energy efficiency of the heat pump — 1 ‘I’ %

Temperature control
From temperature control board
Class I = 1 %, Class II = 2 %, Class III = 1.5 %, Class IV = 2 %, Class V = 3 %, Class VI = 4 %, Class VII = 3.5 %, Class VIII = 5 %
+ 2 %

Supplementary boiler
From boiler board
Seasonal central heating energy efficiency of the room (%)
([ ] - ‘I’) x “II” = - 3 %

Solar contribution
From the board of the solar device
Dimensions of the manifold (in m²) — Volume of the tank (in m³) — Efficiency of the manifold (in %) — Classification of the tank A* = 0.95, A = 0.91, B = 0.86, C = 0.83, D-G = 0.81
(‘III’ x [ ] + ‘IV’ x [ ]) x 0.45 x ([ ] / 100) x [ ] = + 4 %

Room central heating seasonal energy efficiency of the assemble in average climate conditions — 5 %

Room central heating seasonal energy efficiency class of the assemble in average climate conditions

G	F	E	D	C	B	A	A+	A++	A+++
< 30 %	≥ 30 %	≥ 34 %	≥ 36 %	≥ 75 %	≥ 82 %	≥ 90 %	≥ 98 %	≥ 125 %	≥ 150 %

Room central heating seasonal energy efficiency in colder and hotter climate conditions

Colder: 5 - ‘V’ = % Hotter: 5 + ‘VI’ = %

The energy efficiency of the set of products indicated in this sheet may not reflect the actual energy efficiency after installation since such efficiency is affected by additional factors, such as the heat loss in the distribution system and the size of the products compared to the size and features of the building.

Fig. 3-8

Parameters to fill in the low temperature package fiche (30/35).

Parameter	Magis Pro 5 ErP		
	Colder zones	Average zones	Hotter zones
'I'	162	154	201
'II'	*	*	*
'III'	3.43	4.86	4.45
'IV'	1.34	1.90	1.74

Parameter	Magis Pro 8 ErP		
	Colder zones	Average zones	Hotter zones
'I'	125	151	201
'II'	*	*	*
'III'	5.24	4.86	4.69
'IV'	2.05	1.90	1.83

Parameter	Magis Pro 10 ErP		
	Colder zones	Average zones	Hotter zones
'I'	124	145	194
'II'	*	*	*
'III'	2.97	2.67	3.04
'IV'	1.16	1.04	1.19

**to be established by means of table 6 of Regulation 811/2013 in case of an "assembly" including a boiler to integrate with the heat pump. In this case, the heat pump must be considered as the main appliance of the assembly.*

Parameter	Audax TOP
'VI'	Remote control class supplied by default

Fig. 3-9

Parameters to fill in the average temperature package fiche (47/55).

Parameter	Magis Pro 5 ErP		
	Colder zones	Average zones	Hotter zones
'I'	91	112	132
'II'	*	*	*
'III'	3.47	4.31	4.95
'IV'	1.36	1.69	1.94

Parameter	Magis Pro 8 ErP		
	Colder zones	Average zones	Hotter zones
'I'	92	103	114
'II'	*	*	*
'III'	2.41	3.82	3.87
'IV'	0.94	1.49	1.51

Parameter	Magis Pro 10 ErP		
	Colder zones	Average zones	Hotter zones
'I'	88	104	124
'II'	*	*	*
'III'	2.17	2.87	2.97
'IV'	0.85	1.12	1.16

**to be established by means of table 6 of Regulation 811/2013 in case of an "assembly" including a boiler to integrate with the heat pump. In this case, the heat pump must be considered as the main appliance of the assembly.*

Parameter	Audax TOP
'VI'	Remote control class supplied by default

Fig. 3-10

Room central heating system package fiche.

Room central heating seasonal energy efficiency of the heat pump ❶ ____ %

Temperature control
From temperature control board

Class I = 1 %, Class II = 2 %,
Class III = 1.5 %, Class IV = 2 %,
Class V = 3 %, Class VI = 4 %,
Class VII = 3.5 %, Class VIII = 5 %

❷ + ____ %

Supplementary boiler
From boiler board

Seasonal central heating energy efficiency of the room (%)

(____ - _____) x _____ = - ❸ ____ %

Solar contribution

From the board of the solar device

Dimensions of the manifold (in m²)

Volume of the tank (in m³)

Efficiency of the manifold (in %)

Classification of the tank
A* = 0.95, A = 0.91,
B = 0.86, C = 0.83,
D-G = 0.81

(___ x ____ + ____ x ____) x 0.45 x (____ / 100) x ____ = + ❹ ____ %

Room central heating seasonal energy efficiency of the assemble in average climate conditions ❺ ____ %

Room central heating seasonal energy efficiency class of the assemble in average climate conditions

G	F	E	D	C	B	A	A+	A++	A+++
< 30 %	≥ 30 %	≥ 34 %	≥ 36 %	≥ 75 %	≥ 82 %	≥ 90 %	≥ 98 %	≥ 125 %	≥ 150 %

Room central heating seasonal energy efficiency in colder and hotter climate conditions

Colder: ❺ ____ - ___ = ____ %

Warmer: ❺ ____ + ___ = ____ %

The energy efficiency of the set of products indicated in this sheet may not reflect the actual energy efficiency after installation since such efficiency is affected by additional factors, such as the heat loss in the distribution system and the size of the products compared to the size and features of the building.

Fig. 3-11

Follow us

Immergas Italia

immergas.com

Immergas S.p.A.
42041 Brescello (RE) - Italy
Tel. 0522.689011
Fax 0522.680617

Certified company ISO 9001

This instruction booklet is made of ecological paper Cod.1.039356ENG - rev. ST.002317/000 - 01/16 - Inglese per IRLANDA (IE)