Warmet SDS Ceramik 14 kW

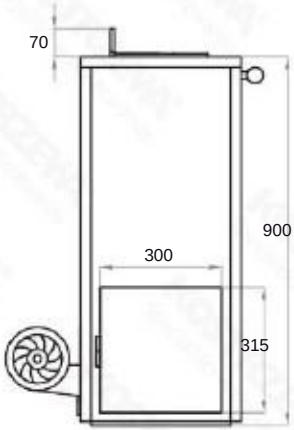

Front view

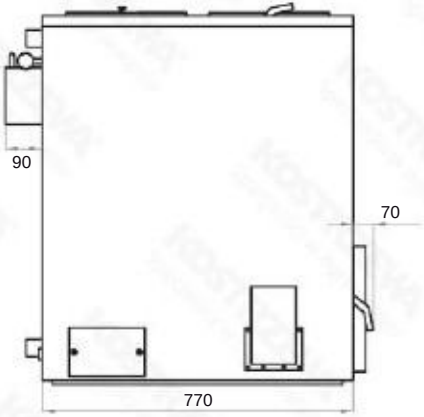

Side view

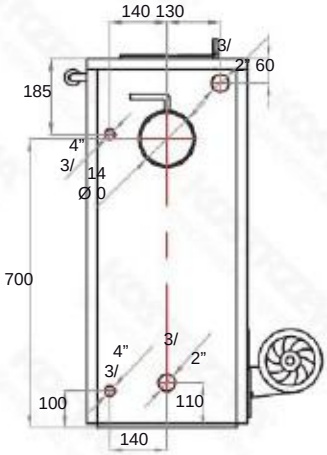

Rear view